DIGITAL SERVO DRIVE
FOR BRUSH/BRUSHLESS MOTORS

CANopen®

Control Modes
- Profile Position-Velocity-Torque, Interpolated Position, Homing
- Camming, Gearing
- Indexer

Command Interface
- CANopen
- ASCII and discrete I/O
- Stepper commands
- ±10V position/velocity/torque (2 inputs)
- PWM velocity/torque command
- Master encoder (Gearing/Camming)

Communications
- CANopen DS-402
- RS-232

Feedback
Incremental

Incremental Encoders
- Digital quad A/B
  Analog Sin/Cos
  Panasonic Incremental A Format
- Aux. quad A/B encoder / encoder out

Absolute Encoders
- SSI, EnDat, Absolute A,
  Tamagawa & Panasonic Absolute A
  Sanyo Denki Absolute A, BiSS (B & C)

Resolver (-R option)
- Brushless Resolver

Other
- Digital Halls

Accessories
- External regen resistors
- External edge filter

Safe Torque Off (STO)
- Two active inputs enable power stage
- One output confirms power stage status

I/O Digital
- 15 inputs, 6 outputs

I/O Analog
- 2, 16-bit inputs
- 1, 12-bit input
- 1, 12-bit output

Dimensions: in [mm]
- 7.92 x 5.51 x 2.31 in (201.2 x 139.9 x 58.7 mm)

Model	Vac	Ic	Ip
XPL-230-18	100 - 240	6	18
XPL-230-36	100 - 240	12	36
XPL-230-40	100 - 240	20	40

Add -R for resolver feedback option

DESCRIPTION

Xenus Plus set new levels of performance, connectivity, and flexibility. CANopen communication provides a widely used cost-effective industrial bus. A wide range of absolute interfaces are built-in including EnDat, Hiperface, and BiSS.

High resolution A/D converters ensure optimal current loop performance. Both isolated and high-speed non-isolated I/O are provided. For safety critical applications, redundant power stage enable inputs can be employed.

In-Position Technologies

GENERAL SPECIFICATIONS

Test conditions: Wye connected load: 2 mH line-line. Ambient temperature = 25 °C. Power input = 230 Vac, 60 Hz, 1 Ø

MODEL	XPL-230-18	XPL-230-36	XPL-230-40	
OUTPUT CURRENT				
Peak Current	18 (12.7)	36 (25.5)	40 (28.3)	Adc (Arms, sinusoidal)
Peak time	1	1	1	s
Continuous current (Note 1)	6 (4.24)	12 (8.5)	20 (14.1)	Adc (Arms, sinusoidal)
INPUT POWER				
Mains voltage, phase, frequency		100~240		Vac, ±10%, 1Ø or 3Ø, 47~63 Hz
Maximum Mains Current, 1Ø (Note 3)	10.1	20.0	20.0	Arms
Maximum Mains current, 3Ø (Note 3)	6.4	10.4	15.4	Arms
+24 Vdc Control power		+20 to +32 Vdc, 500 mA max		Required for operation

DIGITAL CONTROL

Digital Control Loops	Current, velocity, position. 100% digital loop control
Sampling rate (time)	Current loop: 16 kHz (62.5 µs), Velocity & position loops: 4 kHz (250 µs)
Bus voltage compensation	Changes in bus or mains voltage do not affect bandwidth
Minimum load inductance	200 µH line-line

COMMAND INPUTS (NOTE: DIGITAL INPUT FUNCTIONS ARE PROGRAMMABLE)

Distributed Control Modes		
CANopen	Position, Velocity, Torque, Homing, Profile, and Interpolated profile modes	
Stand-alone mode		
Analog torque, velocity, position reference	±10 Vdc, 14 bit resolution	Dedicated differential analog input
Input impedance	74.8 kΩ	Between Ref(+), Ref(-)
Digital position reference	Pulse/Direction, CW/CCW	Stepper commands (2 MHz maximum rate)
	Quad A/B Encoder	2 M line/sec, 8 Mcount/sec (after quadrature)
Digital torque & velocity reference	PWM , Polarity	PWM = 0% - 100%, Polarity = 1/0
	PWM 50%	PWM = 50% ±50%, no polarity signal required
	PWM frequency range	1 kHz minimum, 100 kHz maximum
	PWM minimum pulse width	220 ns
Indexing	Up to 32 sequences can be launched from inputs or ASCII commands.	
Camming	Up to 10 CAM tables can be stored in flash memory	
ASCII	RS-232, 9600~115,200 Baud, 3-wire, RJ-11 connector	

DIGITAL INPUTS

Number	15
[IN1,2,15]	Non-isolated Schmitt trigger, 1 µs RC filter, 24 Vdc max, V_T+ = 2.5~3.5 Vdc, V_T- = 1.3~2.2 Vdc, V_H+ = 0.7~1.5 Vdc 10 kΩ programmable per input to pull-up to +5 Vdc or pull-down to ground
[IN3~6]	Non-isolated line receiver, 100 ns RC filter, +12 Vdc max, programmable as 4 single-ended, or 2 differential Single-ended: [IN3,4] or [IN5,6]: Vin-LO <= 2.3 Vdc, Vin-HI >= 2.7 Vdc, Vhysteresis = 400 mVdc Differential: [IN3/4] or [IN5/6]: Vin-LO <= -200 mVdc, Vin-HI >= 200 mVdc, Vhysteresis = ±200 mVdc
[IN7~14]	Opto-isolated, ±15~30 Vdc compatible, bi-polar, 2 groups of 4 with common for each group Rated impulse ≥ 800 V, Vin-LO ≤ 6.0 Vdc, Vin-HI ≥ 10.0 Vdc, Input current ±3.6 mA @ ±24 Vdc, typical

ANALOG INPUTS

Number	3
[AIN1~2]	Differential, ±10 Vdc, 5 kΩ input impedance, 16-bit resolution
[AIN3]	Single-ended, motor temperature sensor, 4.99 kΩ pulled-up to +5 Vdc, 12-bit resolution

DIGITAL OUTPUTS

Number	6
[OUT1~2]	Current-sinking MOSFET with 1 kΩ pullup to +5 Vdc through diode 1 Adc max, +40 Vdc max; external flyback diode required if driving inductive loads
[OUT3]	High-speed CMOS buffer, ±32 mA
[OUT4~5]	Opto-isolated Darlingtons with 36V Zener flyback diodes, 20 mA max
[OUT6]	Motor brake control: opto-isolated, current-sinking with flyback diode to +24 Vdc, 1 Adc max

ANALOG OUTPUT

Number, Type	1, ±5 Vdc single-ended, 12-bit resolution

MULTI-MODE ENCODER PORT

As Input	Secondary digital quadrature encoder (A, /A, B, /B, X, /X), 121 Ω terminating resistors 18 M-counts/sec, post-quadrature (4.5 M-lines/sec)
As Output	Quadrature encoder emulation with programmable resolution to 4096 lines (65,536 counts) per rev from analog sin/cos encoders or resolvers. Buffered signals from digital quad A/B/X primary encoder A, /A, B, /B, X, /X, from MAX3032 differential line driver

RS-232 PORT

Signals	RxD, TxD, Gnd in 6-position, 4-contact RJ-11 style modular connector
Mode	Full-duplex, DTE serial communication port for drive setup and control, 9,600 to 115,200 baud
Protocol	Binary and ASCII formats

CAN PORT

Signals	CANH, CANL, CAN_GND in 8-position dual RJ-45 style modular connector, wired as per CAN Cia DR-303-1, V1.1
Format	CAN V2.0b physical layer for high-speed connections compliant
Data	CANopen Device Profile DSP-402
Node-ID selection	16 position rotary switch on front panel with 3 additional Node-ID bits available as digital inputs or programmable to flash memory (7-bit addressing, 127 nodes per CAN network

STATUS INDICATOR LEDS

Drive Status	Bicolor LED, drive status indicated by color, and blinking or non-blinking condition
CAN Status	Bicolor LED, status of CAN bus indicated by color and blink codes to CAN Indicator Specification 303-3

NOTES:

1. Heatsinking and/or forced-air cooling is required for the continuous output power rating
2. Brake[OUT6] is programmable as motor brake, or as general purpose digital output
3. The actual mains current is dependent on the mains voltage, number of phases, and motor load and operating conditions. The Maximum Mains Currents shown above occur when the drive is operating from the maximum input voltage and is producing the rated continuous output current at the maximum output voltage.

5V OUTPUT		
	Two independent 5 Vdc @ 400 mA outputs, thermal and short-circuit protected	
REGENERATION		
Operation	Internal solid-state switch drives external regen resistor (see Ordering Guide for types)	
Cut-In Voltage	+HV > 390 Vdc	Regen output is on, (optional external) regen resistor is dissipating energy
Drop-Out Voltage	+HV < 380 Vdc	Regen output is off, (optional external) regen resistor not dissipating energy
Tolerance	±2 Vdc	For either Cut-In or Drop-Out voltage
PROTECTIONS		
HV Overvoltage	+HV > 400 Vdc	Drive PWM outputs turn off until +HV is less than overvoltage
HV Undervoltage	+HV < 60 Vdc	Drive PWM outputs turn off until +HV is greater than undervoltage
Drive over temperature	IGBT > 80 °C ±3 °C	Drive PWM outputs turn off until IGBT temperature is below threshold
Short circuits	Output to output, output to ground, internal PWM bridge faults	
I^2T Current limiting	Programmable: continuous current, peak current, peak time	
Motor over temperature	Programmable input to disable drive when voltage is above or below a set point 0~5 Vdc	
Feedback power loss	Fault occurs if feedback is removed or +5 V is <85% of normal	
MECHANICAL & ENVIRONMENTAL		
Size	7.92 x 5.51 x 2.31 in (201.2 x 139.9 x 58.7 mm)	
Weight	3.0 lb (1.36 kg) for drive without heatsink 3.1 lb (1.40 kg) for XPL-HS heatsink, 1.86 lb (0.84 kg) for XPL-HL heatsink	
Ambient temperature	0 to +45 °C operating, -40 to +85 °C storage	
Humidity	0% to 95%, non-condensing	
Contaminants	Pollution degree 2	
Vibration	2 *g* peak, 10~500 Hz (sine), IEC60068-2-6	
Shock	10 *g*, 10 ms, half-sine pulse, IEC60068-2-27	
Environment	IEC68-2: 1990	
Cooling	Heat sink and/or forced air cooling required for continuous power output	

AGENCY STANDARDS CONFORMANCE

In accordance with EC Directive 2004/108/EC (EMC Directive)

EN 55011: 2007	CISPR 11:2003/A2:2006 Industrial, Scientific, and Medical (ISM) Radio Frequency Equipment – Electromagnetic Disturbance Characteristics – Limits and Methods of Measurement Group 1, Class A
EN 61000-6-1: 2007	Electromagnetic Compatibility (EMC) – Part 6-1: Generic Standards – Immunity for residential, Commercial and Light-industrial Environments

In accordance with EC Directive 2006/95/EC (Low Voltage Directive)

IEC 61010-1:2001	Safety Requirements for Electrical Equipment for Measurement, Control and Laboratory Use

Underwriters Laboratory Standards

UL 61010-1, 2nd Ed.: 2004	Safety Requirements for Electrical Equipment for Measurement, Control and Laboratory Use

UL File Number E249894

FEEDBACK SPECIFICATIONS

DIGITAL QUAD A/B ENCODER	
Type	Quadrature, differential line driver outputs
Signals	A, /A, B, /B, (X, /X, index signals optional) RS-422/RS-485 line receivers with fault detection for open/shorted inputs, or low signal amplitude
Frequency	5 MHz line frequency, 20 MHz quadrature count frequency
ANALOG ENCODER	
Type	Sin/cos/index, differential line driver outputs, 0.5 Vpeak-peak (1.0 Vpeak-peak differential) centered about 2.5 Vdc typical. Common-mode voltage 0.25 to 3.75 Vdc
Signals	Sin(+), sin(-), cos(+), cos(-), index(+), index(-)
Frequency	230kHz maximum line (cycle) frequency
Interpolation	10 bits/cycle (1024 counts/cycle)
DIGITAL HALLS	
Type	Digital, single-ended, 120° electrical phase difference
Signals	U, V, W
Inputs	10 kΩ pullups to +5 Vdc, 1 µs RC filter to Schmitt trigger inverters
MULTI-MODE ENCODER PORT	
As Input	Secondary digital quadrature encoder (A, /A, B, /B, X, /X), 121 Ω terminating resistors 18 M-counts/sec, post-quadrature (4.5 M-lines/sec)
As Emulated Output	Quadrature encoder emulation with programmable resolution to 4096 lines (65,536 counts) per rev from analog sin/cos encoders or resolvers. A, /A, B, /B, X, /X, from MAX3032 differential line driver
As Buffered Output	Digital encoder feedback signals from primary digital encoder are buffered by MAX3032 line driver
RESOLVER (-R OPTION)	
Type	Brushless, single-speed, 1:1 to 2:1 programmable transformation ratio
Resolution	14 bits (equivalent to a 4096 line quadrature encoder)
Reference frequency	8.0 kHz
Reference voltage	2.8 Vrms, auto-adjustable by the drive to maximize feedback
Reference maximum current	100 mA
Maximum RPM	10,000+
ENCODER POWER SUPPLIES	
Number	2
Ratings	+5 Vdc @ 400 mA from +5V Out1 on J8-20 and +5V Out2 on J10-6, J10-17
Protection	Thermal and short-circuits to ground Encoder power developed from +24 Vdc so position information is not lost when AC mains power is removed

SPECIFICATIONS (CONT'D)

SAFE TORQUE OFF (STO)

Inputs	2 two-terminal: [STO-1+], [STO-1-], [STO-2+], [STO-2-]
Type	Opto-isolators, 24V compatible
Output	1 two-terminal: [LED+], [LED-] 24V compatible

DIMENSIONS

Inches (mm)

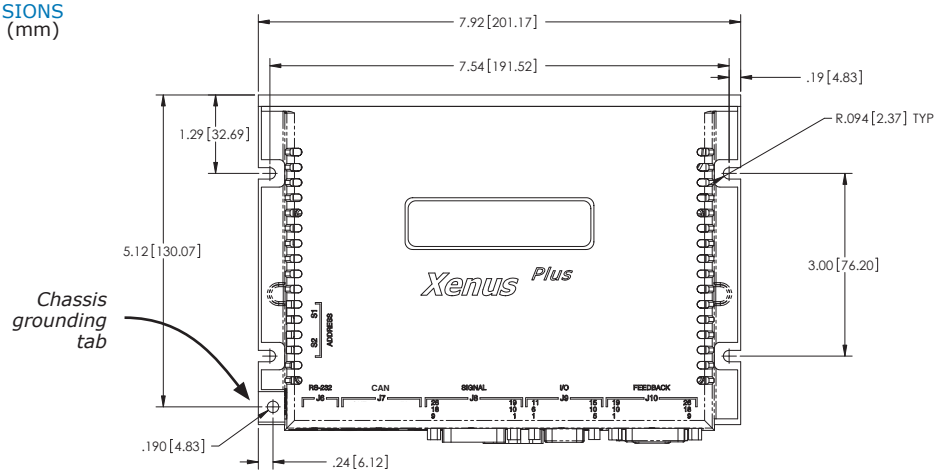

Chassis Grounding:
For CE compliance and machine safety an electrically conductive grounding tab is provided. This connects to the heatplate and to frame ground.

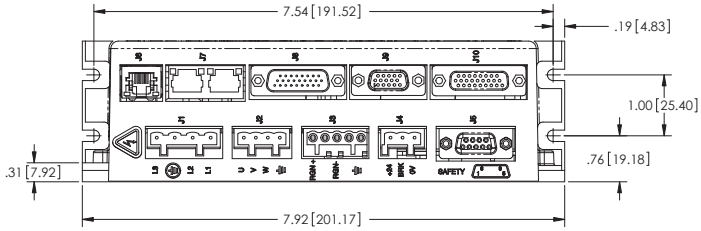

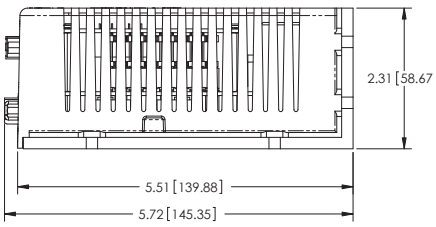

Note!
When you see this marker, it's for hot tips or best practices that will help you get the best results when using Copley Controls products.

16-01437 Document Revision History

Revision	Date	Remarks
00	March 16, 2017	Initial released version

CANOPEN

Based on the CAN V2.0b physical layer, a robust, two-wire communication bus originally designed for automotive use where low-cost and noise-immunity are essential, CANopen adds support for motion-control devices and command synchronization. The result is a highly effective combination of data-rate and low cost for multi-axis motion control systems. Device synchronization enables multiple axes to coordinate moves as if they were driven from a single control card.

CANOPEN COMMUNICATION

Xenus uses the CAN physical layer signals CAN_H, CAN_L, and CAN_GND for connection, and CANopen protocol for communication. Before installing the drive in a CAN system, it must be assigned a CAN address. A maximum of 127 CAN nodes are allowed on a single CAN bus. The rotary switch on the front panel controls the four lower bits of the seven-bit CAN address. When the number of nodes on a bus is less than sixteen, the CAN address can be set using only the switch.

For installations with sixteen or more CAN nodes on a network CME 2 can be used to configure Xenus to use the rotary switch, or combinations of digital inputs and programmed offset in flash memory to configure the drive with a higher CAN node address. For more information on CANopen communications, download the CANopen Manual from the Copley web-site: http://www.copleycontrols.com/motion/downloads/pdf/CANopenProgrammersManual.pdf

CANOPEN CONNECTORS

Dual RJ-45 connectors that accept standard Ethernet cables are provided for CAN bus connectivity. Pins are wired-through so that drives can be daisy-chained and controlled with a single connection to the user's CAN interface. A CAN terminator should be placed in the last drive in the chain. The XPL-NK connector kit provides a D-Sub adapter that plugs into a CAN controller and has an RJ-45 socket that accepts the Ethernet cable.

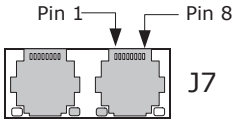

J7 CAN CONNECTIONS

XPL-NK CAN CONNECTOR KIT

The kit contains the XPL-CV adapter that converts the CAN interface D-Sub 9M connector to an RJ-45 Ethernet cable socket, plus a 10 ft (3 m) cable and terminator. Both connector pin-outs conform to the CiA DR-303-1 specification.

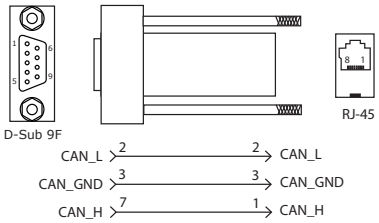

NET (CAN STATUS) LED

A bi-color LED gives the state of the CAN connection in accordance with the CAN-CiA specification 303, part 3.

The green (RUN) LED shows the state of the CANopen state machine. The red (ERR) LED shows the occurrence of errors (sync, guard, or heartbeat) and of the CAN bus physical layer.

During a reset condition, the green LED will be off.
In operation, the red & green colors will alternate with the number of blinks or on/off condition shown in the table to the right.

Note: Red & green led on-times do not overlap. LED color may be red, green, off, or flashing of either color.

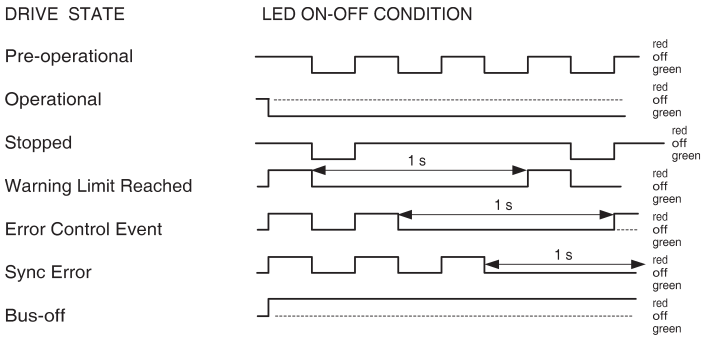

CAN NETWORK NODE-ID (ADDRESS)

In an CANopen network, nodes are assigned addresses 1~127. Address 0 is reserved for the CAN bus master. In the XPL, the node address is provided by two 16-position rotary switches with hexadecimal encoding. These can set the address of the drive from 0x01~0x7F (1~127 decimal). The chart shows the decimal values of the hex settings of each switch.

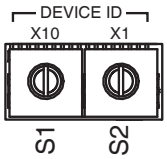

CME2 -> Amplifier -> Network Configuration

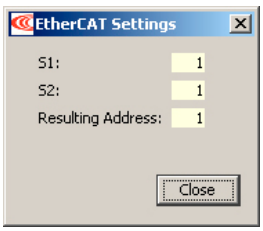

Node-ID (Address) Switches

To find the Node-ID given the switch settings:
Node-ID = (S1 * 16) + S2
Example: S1 = 5, S2 = B
S1 value = (5*16) = 80, S2 value = Hex(B) = 11,
Node-ID = 80 + 11 = 91

To find the switch settings for a given address:
S1 = The integer part of (Node-ID / 16)
S2 = Hex (Node-ID - (S1 * 16))
Example: Node-ID = 91
S1 = 91/16 = 5.69, integer part = 5, (5*16) = 80
S2 = Hex (91 - 80) = 11 = 0xB

	S1	S2
HEX	DEC	
0	0	0
1	16	1
2	32	2
3	48	3
4	64	4
5	80	5
6	96	6
7	112	7
8	Not Used for CAN Addr	8
9		9
A		10
B		11
C		12
D		13
E		14
F		15

COMMUNICATIONS

RS-232 COMMUNICATIONS

XPL is configured via a three-wire, full-duplex DTE RS-232 port that operates from 9600 to 115,200 Baud, 8 bits, no parity, and one stop bit. Signal format is full-duplex, 3-wire, DTE using RxD, TxD, and Gnd. Connections to the *XPL* RS-232 port are through J7, an RJ-11 connector. The *XPL* Serial Cable Kit (SER-CK) contains a modular cable, and an adapter that connects to a 9-pin, Sub-D serial port connector (COM1, COM2, etc.) on PC's and compatibles.

J6: RS-232 PORT

RJ-11 receptacle,
6 position, 4 contact

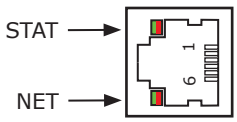

PIN	SIGNAL
2	RxD
3,4	Gnd
5	Txd

STAT LED (ON J6)

A bi-color LED gives the state of the Xenus Plus drive.
Colors do not alternate, and can be solid ON or blinking:

Green/Solid	=	Drive OK and enabled. Will run in response to reference inputs or EtherCAT commands.
Green/Slow-Blinking	=	Drive OK but NOT-enabled. Will run when enabled.
Green/Fast-Blinking	=	Positive or Negative limit switch active. Drive will only move in direction not inhibited by limit switch.
Red/Solid	=	Transient fault condition. Drive will resume operation when fault is removed.
Red/Blinking	=	Latching fault. Operation will not resume until drive is Reset.

Drive Fault conditions:

- Over or under-voltage
- Encoder +5 Vdc fault
- Short-circuits from output to output
- Internal short circuits
- Motor over-temperature
- Drive over-temperature
- Short-circuits from output to ground

Faults are programmable to be either transient or latching

SER-CK SERIAL CABLE KIT

The SER-CK provides connectivity between a D-Sub 9 male connector and the RJ-11 connector on the XPL. It includes an adapter that plugs into the COM1 (or other) port of a PC and uses common modular cable to connect to the XPL. The connections are shown in the diagram below.

Don't forget to order a Serial Cable Kit SER-CK when placing your order for an XPL!

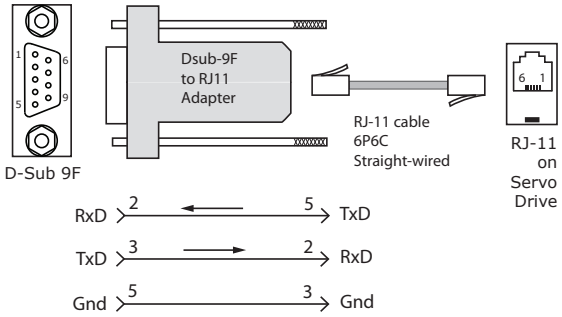

ASCII COMMUNICATIONS

The Copley ASCII Interface is a set of ASCII format commands that can be used to operate and monitor Copley Controls Accelnet, Stepnet, and Xenus series amplifiers over an RS-232 serial connection. For instance, after basic amplifier configuration values have been programmed using CME 2, a control program can use the ASCII Interface to:

- Enable the amplifier in Programmed Position mode.
- Home the axis.
- Issue a series of move commands while monitoring position, velocity, and other run-time variables.

The Baud rate defaults to 9,600 after power-on or reset and is programmable up to 115,200 thereafter.
Sending a break character will reset the Baud rate to 9,600.

Additional information can be found in the ASCII Programmers Guide on the Copley website:
http://www.copleycontrols.com/Motion/pdf/ASCII_ProgrammersGuide.pdf

RS-232 MULTI-DROP

The RS-232 specification makes no allowance for more than two devices on a serial link. But, multiple Xenus drives can communicate over a single RS-232 port by daisy-chaining a master drive to other drives using CAN cables. In the CAN protocol, address 0 is reserved for the CAN master and thereafter all other nodes on a CAN network must have unique, non-zero addresses. When the Xenus CAN address is set to 0, it acts as a CAN master, converting the RS-232 data into CAN messages and passing it along to the other drives which act as CAN nodes.

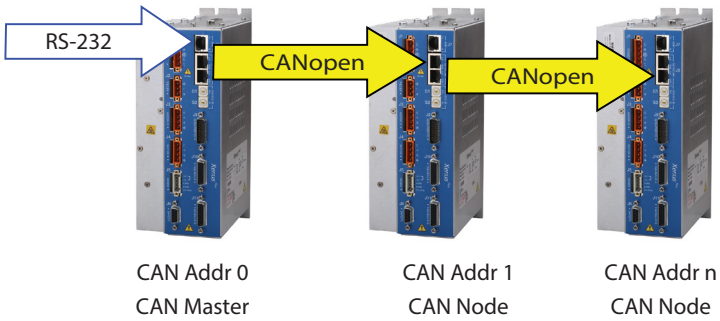

For Serial-multi-drop you'll need an Serial Cable Kit SER-CK plus CANopen network cables to connect the drives as shown.
The XPL-NC-01 and XPL-NC-10 are 1 ft (0.3m) and 10 ft (3m) cables that will do the job.

SAFE TORQUE OFF (STO)

DESCRIPTION

The XPL has a safety feature that is designed to provide the Safe Torque Off (STO) function as defined in IEC 61800-5-2. Two opto-couplers are provided which, when de-energized, prevent the upper and lower devices in the PWM outputs from being operated by the digital control core. This provides a positive OFF capability that cannot be overridden by the control firmware, or associated hardware components. When the opto-couplers are activated (current is flowing in the input diodes), the control core will be able to control the on/off state of the PWM outputs.

FUNCTIONAL DIAGRAM

In order for the PWM outputs of the Xenus Plus to be activated, current must be flowing through both opto-couplers that are connected to the STO-1 and STO-2 terminals of J5, and the drive must be in an ENABLED state. The LED outputs on J5 connect an opto-coupler to an external LED and will conduct current through the LED to light it whenever the PWM outputs can be activated, or the drive is in a diagnostic state. When the LED opto-coupler is OFF, the drive is in a Safe state and the PWM outputs cannot be activated to drive a motor.

STO MUTING

The diagram below shows connections that will energize both STO-1 and STO-2 opto-couplers.
When this is done the STO feature is "muted" and control of the output PWM stage is under control of the digital control core.
If not using the STO feature, these connections must be made in order for the Xenus to be enabled.

FUNCTIONAL DIAGRAM

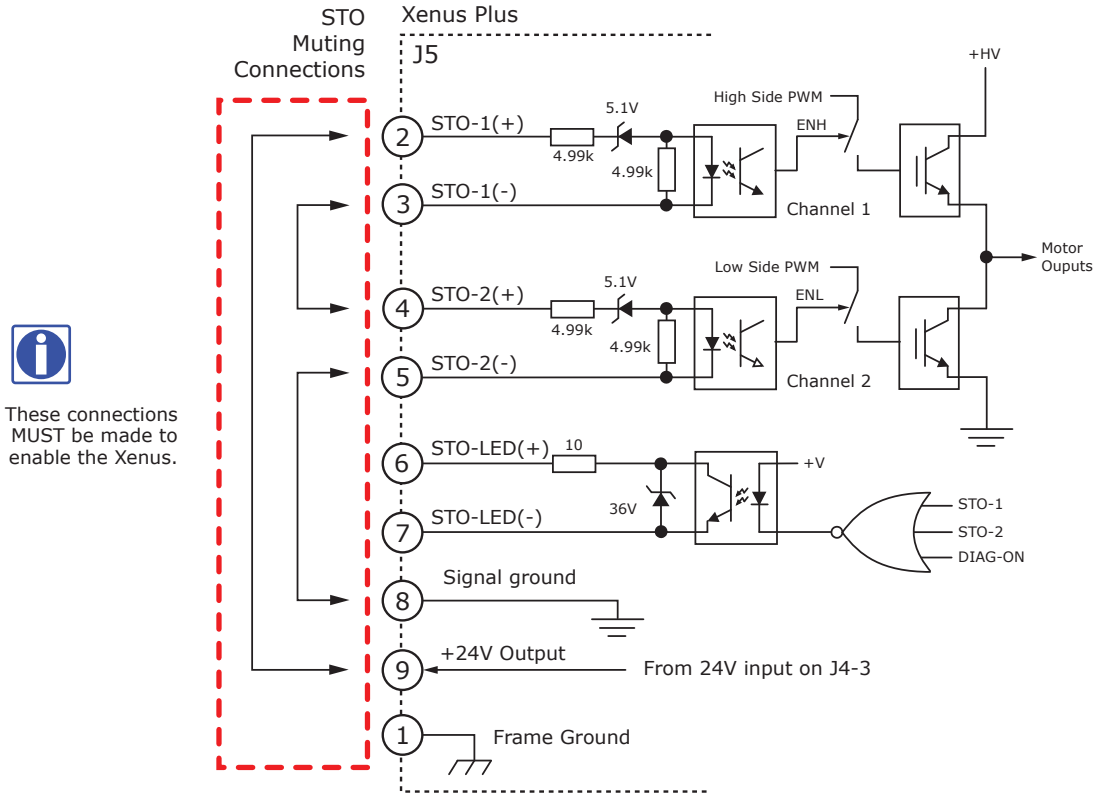

STO CONNECTOR MUTING CONNECTIONS

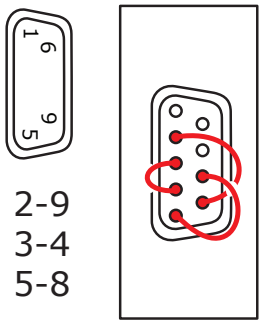

J5 SIGNALS

PIN	SIGNAL	PIN	SIGNAL
1	Frame Gnd	6	STO-LED(+)
2	STO-1(+)	7	STO-LED(-)
3	STO-1(-)	8	24 Vdc Common
4	STO-2(+)	9	+24 Vdc Output
5	STO-2(-)		

COMMAND INPUTS

DIGITAL POSITION

Digital position commands can be in either single-ended or differential format. Single-ended signals should be sourced from devices with active pull-up and pull-down to take advantage of the high-speed inputs. Differential inputs have 121 Ω line-terminators.

SINGLE-ENDED PULSE & DIRECTION

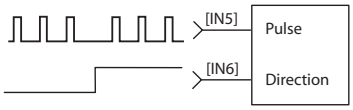

DIFFERENTIAL PULSE & DIRECTION

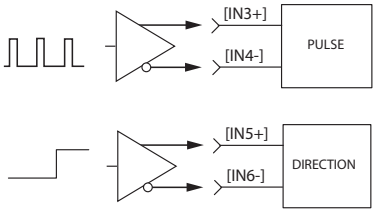

SINGLE-ENDED CU/CD

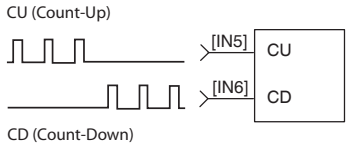

DIFFERENTIAL CU/CD

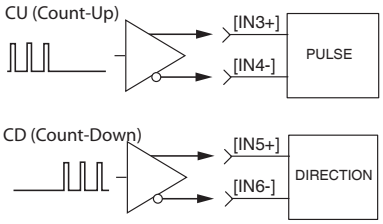

QUAD A/B ENCODER SINGLE-ENDED

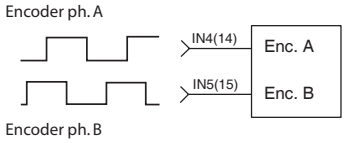

QUAD A/B ENCODER DIFFERENTIAL

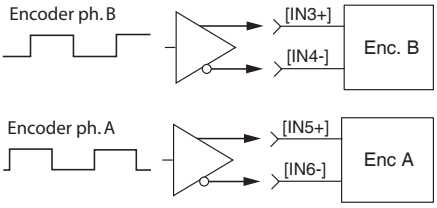

DIGITAL TORQUE, VELOCITY

Digital torque or velocity commands can be in either single-ended or differential format. Single-ended signals must be sourced from devices with active pull-up and pull-down to take advantage of the high-speed inputs.

SINGLE-ENDED PWM & DIRECTION

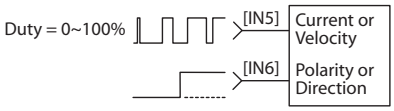

DIFFERENTIAL PWM & DIRECTION

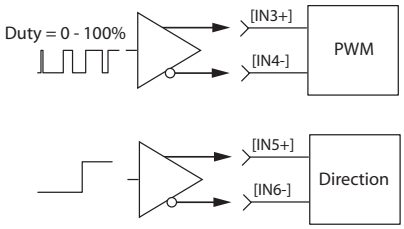

SINGLE-ENDED 50% PWM

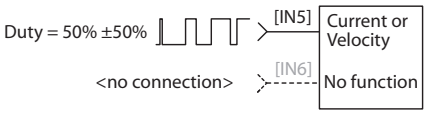

DIFFERENTIAL 50% PWM

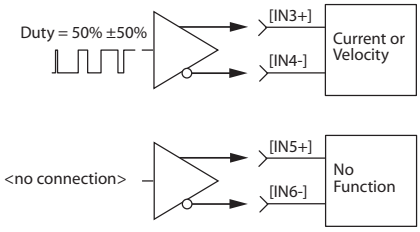

MULTI-MODE ENCODER PORT

This port consists of three differential input/output channels that take their functions from the Basic Setup of the drive. With quad A/B encoder feedback, the port works as an output, buffering the signals from the encoder. With resolver or sin/cos encoder versions, the feedback is converted to "emulated" quad A/B/X signals with programmable resolution. These signals can then be fed back to an external motion controller that closes the position or velocity loops. As an input, the port can take quad A/B signals to produce a dual-loop position control system or use the signals as master-encoder commands in camming mode. In addition, the port can take stepper command signals (CU/CD or Pulse/Direction) in differential format.

AS COMMAND INPUTS

AS DIGITAL COMMAND INPUTS IN PULSE/DIRECTION, PULSE-UP/PULSE-DOWN, OR DIGITAL QUADRATURE ENCODER FORMAT

The multi-mode port can also be used when digital command signals are in a differential format. These are the signals that typically go to single-ended inputs. But, at higher frequencies these are likely to be differential signals in which case the multi-mode port can be used.

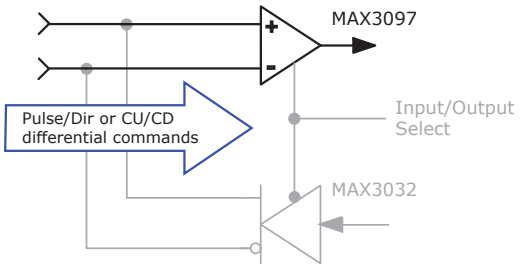

AS A MASTER OR CAMMING ENCODER INPUT FROM A DIGITAL QUADRATURE ENCODER

When operating in position mode the multi-mode port can accept digital command signals from external encoders. These can be used to drive cam tables, or as master-encoder signals when operating in a master/slave configuration.

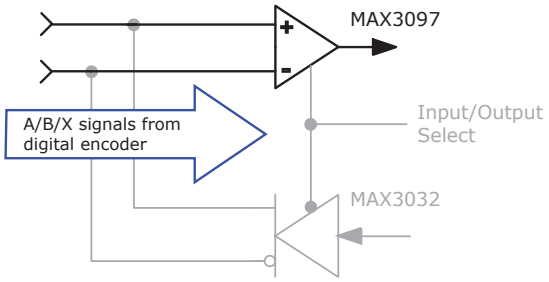

AS AN OUTPUT FOR FEEDBACK SIGNALS TO AN EXTERNAL CONTROLLER

AS BUFFERED OUTPUTS FROM A DIGITAL QUADRATURE PRIMARY ENCODER

When using a digital quadrature feedback encoder, the A/B/X signals drive the multi-mode port output buffers directly. This is useful in systems that use external controllers that also need the motor feedback encoder signals because these now come from J8, the Control connector. In addition to eliminating "Y" cabling where the motor feedback cable has to split to connect to both controller and motor, the buffered outputs reduce loading on the feedback cable that could occur if the motor encoder had to drive two differential inputs in parallel, each with it's own 121 ohm terminating resistor.

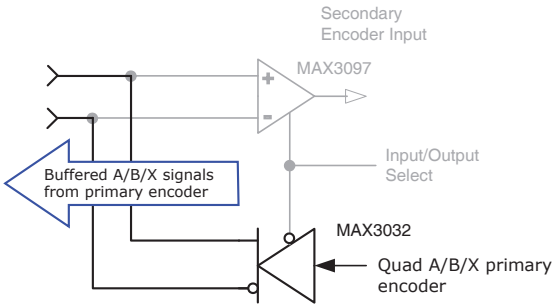

AS EMULATED QUAD A/B/X ENCODER OUTPUTS FROM AN ANALOG SIN/COS FEEDBACK ENCODER

Analog sin/cos signals are interpolated in the drive with programmable resolution. The incremental position data is then converted back into digital quadrature format which drives the multi-mode port output buffers. Some analog encoders also produce a digital index pulse which is connected directly to the port's output buffer. The result is digital quadrature A/B/X signals that can be used as feedback to an external control system.

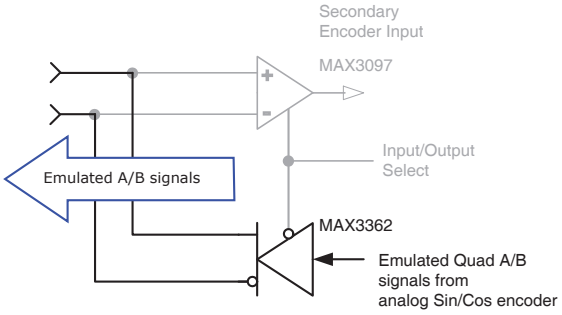

INPUTS

NON-ISOLATED DIGITAL INPUTS

Inputs [IN1,2,15] are 24V tolerant
These are high-speed types with pull-up resistors to +5 Vdc and 1 µs RC filters when driven by active sources. The active level is programmable on each input. Input [IN1] is dedicated to the drive enable function. The remaining inputs [IN2~IN15] have programmable functions.

HS Inputs [IN1,2,15]
24 Vdc max

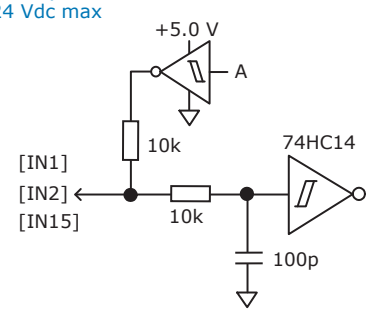

DIGITAL INPUTS [IN3~6]

These inputs have all the programmable functions of the GP inputs plus these additional functions on [IN8] & [IN9] which can be configured as single-ended or differential:

- PWM 50%, PWM & Direction for Velocity or Current modes
- Pulse/Direction, CU/CD, or A/B Quad encoder inputs for Position or Camming modes

SINGLE-ENDED
12 Vdc max

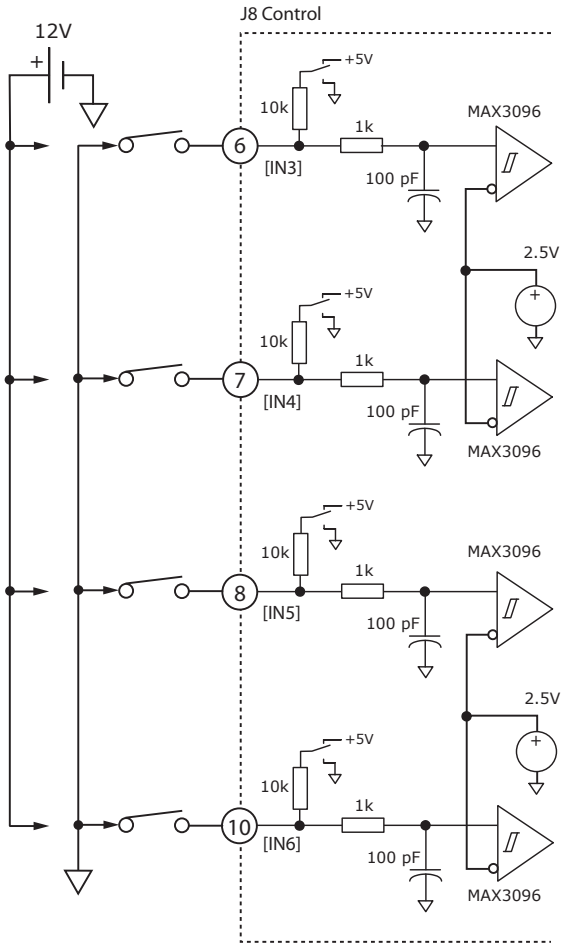

DIFFERENTIAL
12 Vdc max

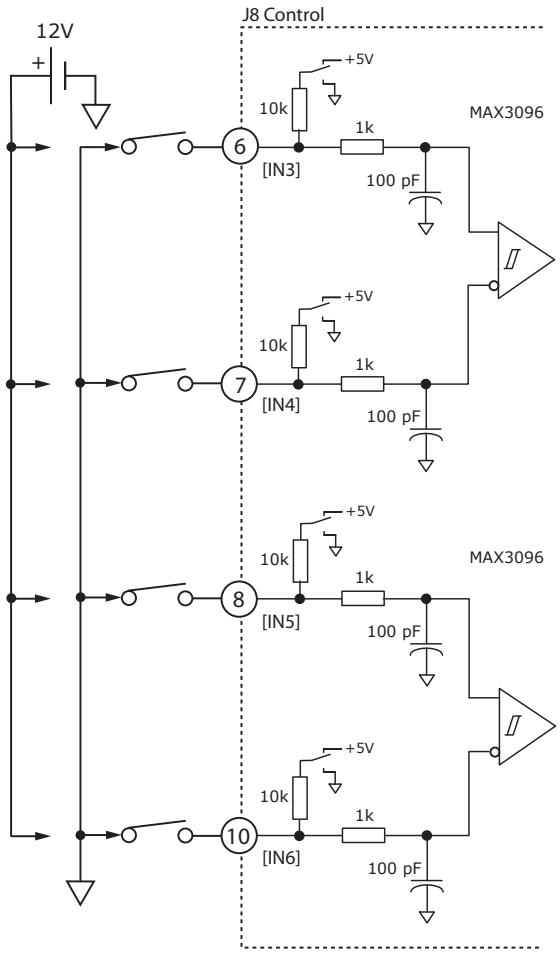

PLC outputs are frequently current-sourcing from 24V for driving grounded loads. PC based digital controllers commonly use NPN or current-sinking outputs. Set the Xenus inputs to pull-down to ground for current-sourcing connections, and to pull-up to 5V for current-sinking connections.

OPTO-ISOLATED DIGITAL INPUTS

These inputs have all the programmable functions of the GP inputs plus opto-isolation. There are two groups of four inputs, each with its' own common terminal. Grounding the common terminal configures the inputs to work with current-sourcing outputs from controllers like PLC's. When the common terminal is connected to +24V, then the inputs will be activated by current-sinking devices such as NPN transistors or N-channel MOSFETs. The minimum ON threshold of the inputs is ±15 Vdc.

[IN7~10]
±30 Vdc max

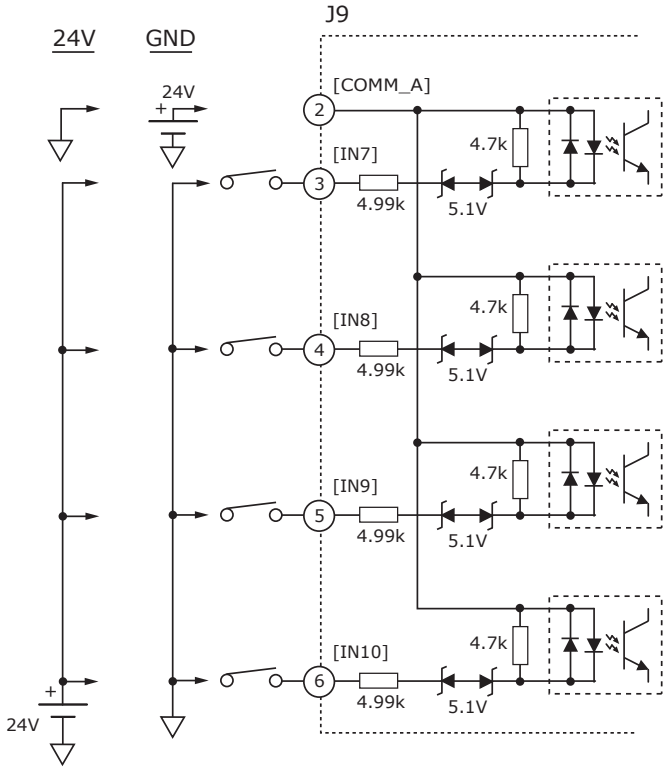

[IN11~14]
±30 Vdc max

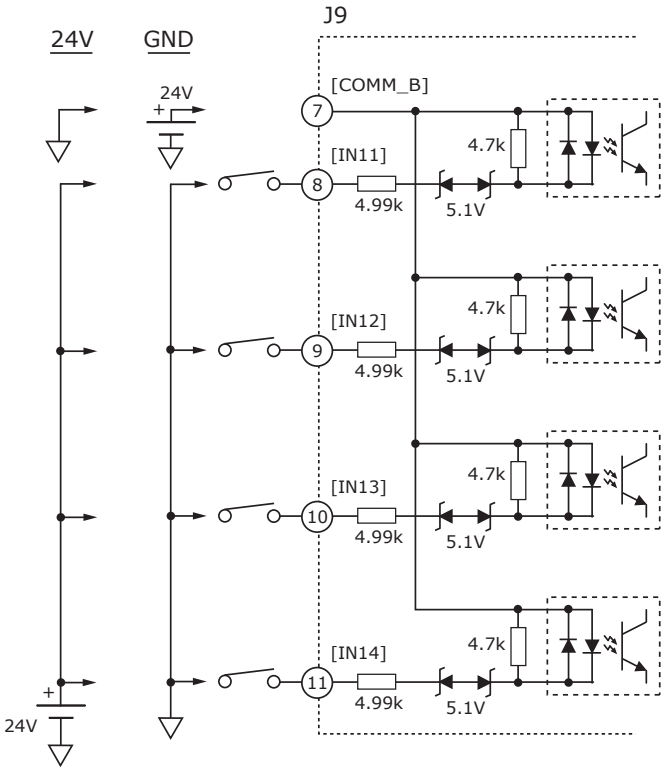

Inputs [7~14] work with current-sourcing OR current-sinking connections. Connect the COMM to controller ground/common for current-sourcing connections and to 15~24V from the controller for current-sinking connections.

ANALOG INPUTS

Two differential analog inputs with ±10 Vdc range have programmable functions. As a reference input [AIN1] can take position/velocity/torque commands from a controller. A second input [AIN2] is programmable for other functions. The ratio of drive output current or velocity vs. reference input voltage is programmable.

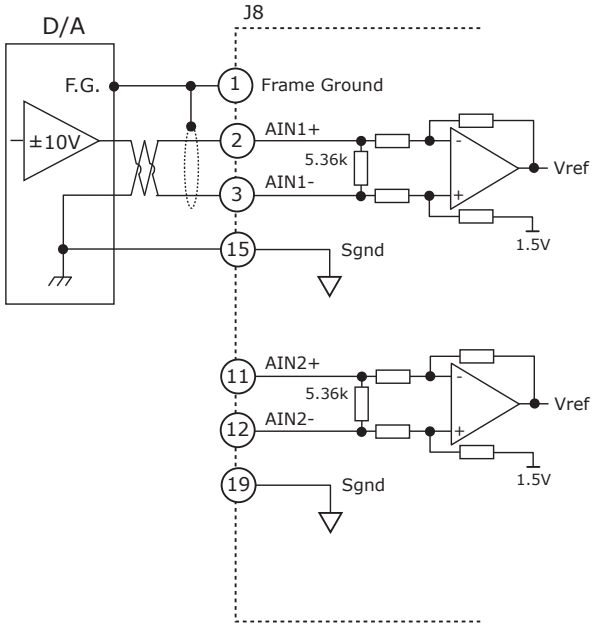

OUTPUTS

DIGITAL OUTPUTS [OUT1], [OUT2]

These are open-drain MOSFETs with 1 kΩ pull-up resistors in series with a diode to +5 Vdc. They can sink up to 1 Adc from external loads operating from power supplies to +30 Vdc. The output functions are programmable. The active state of the outputs is programmable to be on or off. When driving inductive loads such as a relay, an external fly-back diode is required.
The internal diode in the output is for driving PLC inputs that are opto-isolated and connected to +24 Vdc. The diode prevents conduction from +24 Vdc through the 1 kΩ resistor to +5 Vdc in the drive. This could turn the PLC input on, giving a false indication of the drive output state.

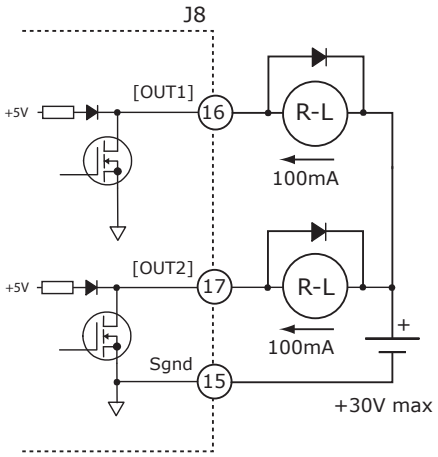

HIGH SPEED OUTPUT [OUT3]

5V CMOS

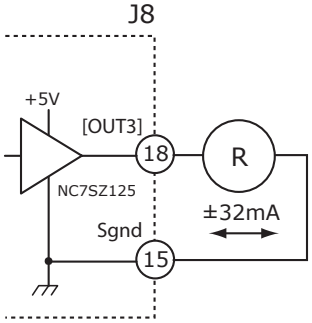

OPTO-ISOLATED OUTPUTS [OUT4,5]

30 Vdc max
Zener clamping diodes across outputs allow driving of resistive-inductive (R-L) loads without external flyback diodes.

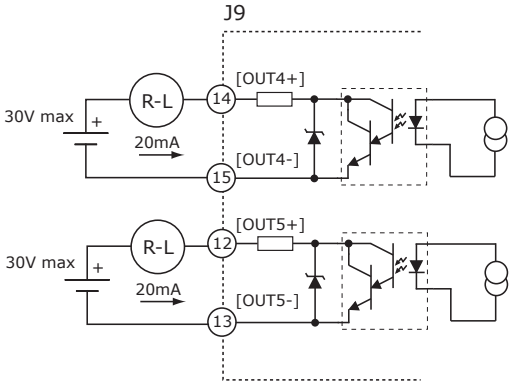

BRAKE OUTPUT [OUT6]

This output is an open-drain MOSFET with an internal flyback diode connected to the +24 Vdc input. It can sink up to 1A from a motor brake connected to the +24 Vdc supply. The operation of the brake is programmable with *CME 2*. It can also be programmed as a general-purpose digital output.

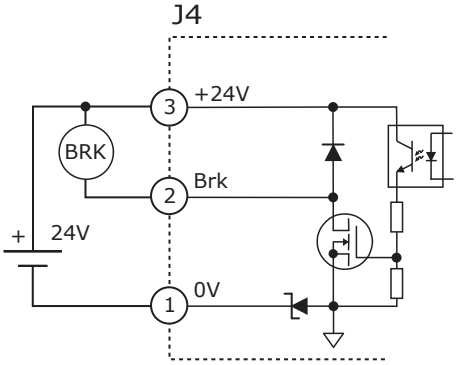

ANALOG OUTPUT

The analog output is programmable and has an output voltage range of ±5 Vdc. An op-amp buffers the output of a 12-bit D/A converter.

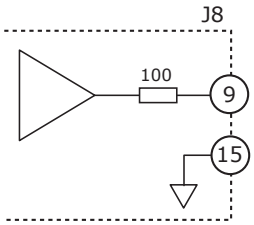

MOTOR CONNECTIONS

Motor connections are of three types: phase, feedback, and thermal sensor. The phase connections carry the drive output currents that drive the motor to produce motion. A thermal sensor that indicates motor overtemperature is used to shut down the drive to protect the motor. Feedback can be digital quad A/B encoder, analog sin/cos encoder, resolver or digital Halls, depending on the version of the drive.

QUAD A/B ENCODER WITH FAULT PROTECTION

Encoders with differential line-driver outputs provide incremental position feedback via the A/B signals and the optional index signal (X) gives a once per revolution position mark. The MAX3097 receiver has differential inputs with fault protections for the following conditions:

Short-circuits line-line:	This produces a near-zero voltage between A & /A which is below the differential fault threshold.
Open-circuit condition:	The 121Ω terminator resistor will pull the inputs together if either side (or both) is open. This will produce the same fault condition as a short-circuit across the inputs.
Low differential voltage detection:	This is possible with very long cable runs and a fault will occur if the differential input voltage is < 200mV.
±15kV ESD protection:	The 3097E has protection against high-voltage discharges using the Human Body Model.
Extended common-mode range:	A fault occurs if the input common-mode voltage is outside of the range of -10V to +13.2V

CONNECTIONS WITH A/B/X ENCODER

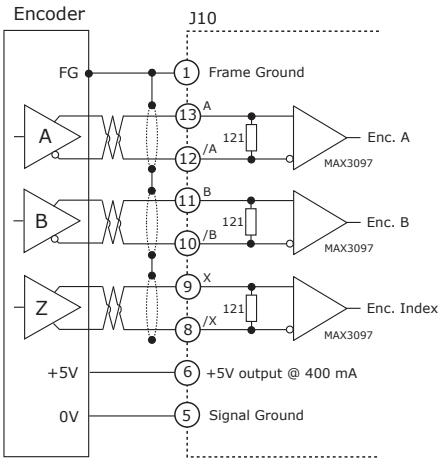

CONNECTIONS WITH NO INDEX SIGNAL

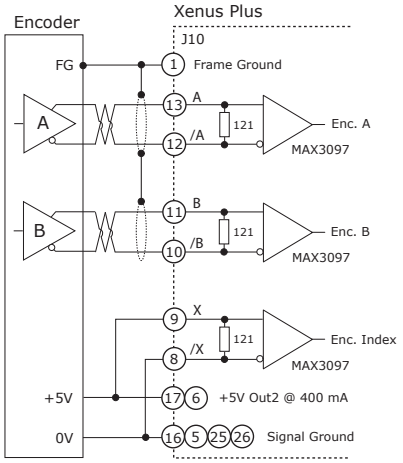

ANALOG SIN/COS INCREMENTAL ENCODER

The sin/cos/index inputs are differential with 121 Ω terminating resistors and accept 1 Vp-p signals in the format used by incremental encoders with analog outputs, or with ServoTube motors.

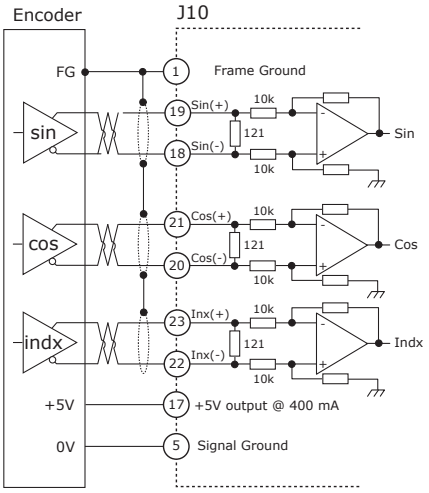

RESOLVER (-R MODELS)

Connections to the resolver should be made with shielded cable that uses three twisted-pairs. Once connected, resolver set up, motor phasing, and other commissioning adjustments are made with CME 2 software. There are no hardware adjustments.

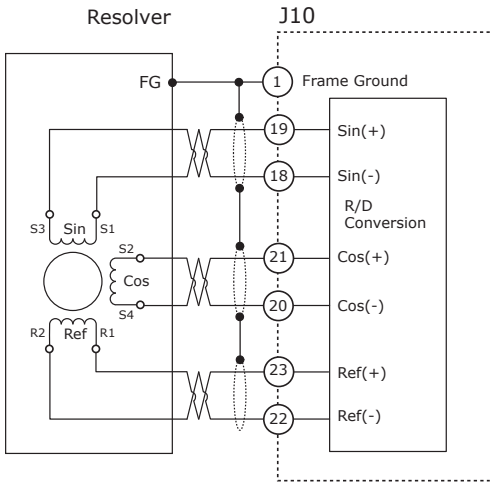

MOTOR CONNECTIONS (CONT'D)

SSI ABSOLUTE ENCODER

The SSI (Synchronous Serial Interface) is an interface used to connect an absolute position encoder to a motion controller or control system. The XPL drive provides a train of clock signals in differential format to the encoder which initiates the transmission of the position data on the subsequent clock pulses. The polling of the encoder data occurs at the current loop frequency (16 kHz). The number of encoder data bits and counts per motor revolution are programmable. The hardware bus consists of two signals: SCLK and SDATA. Data is sent in 8 bit bytes, LSB first. The SCLK signal is only active during transfers. Data is clocked out on the falling edge and clock in on the rising edge of the Master.

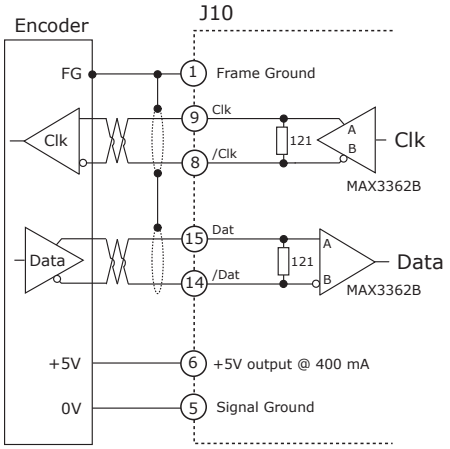

ENDAT ABSOLUTE ENCODER

The EnDat interface is a HeidSTO-1ain interface that is similar to SSI in the use of clock and data signals, but which also supports analog sin/cos channels from the same encoder. The number of position data bits is programmable as is the use of sin/cos channels. Use of sin/cos incremental signals is optional in the EnDat specification.

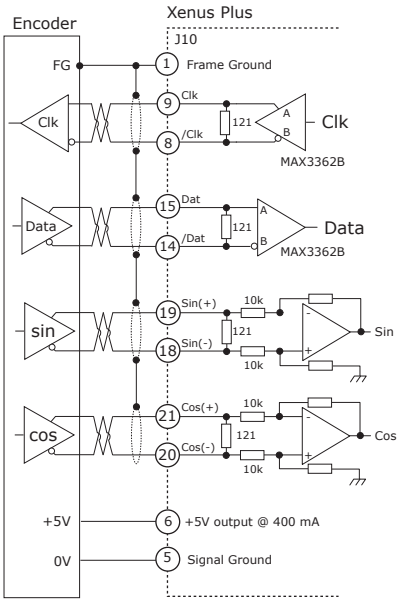

BiSS ABSOLUTE ENCODER

BiSS is an - Open Source - digital interface for sensors and actuators. BiSS refers to principles of well known industrial standards for Serial Synchronous Interfaces like SSI, AS-Interface® and Interbus® with additional options.

- Serial Synchronous Data Communication
- Cyclic at high speed
- 2 unidirectional lines Clock and Data
  - Line delay compensation for high speed data transfer
  - Request for data generation at slaves
  - Safety capable: CRC, Errors, Warnings
  - Bus capability incl. actuators
- Bidirectional
  - BiSS B-protocol: Mode choice at each cycle start
  - BiSS C-protocol: Continuous mode

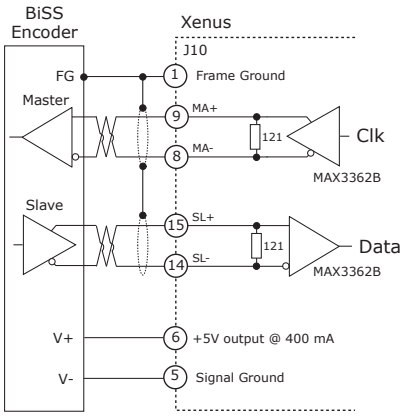

NIKON-A ABSOLUTE ENCODER

The Nikon A interface is a serial, half-duplex type that is electrically the same as RS-485

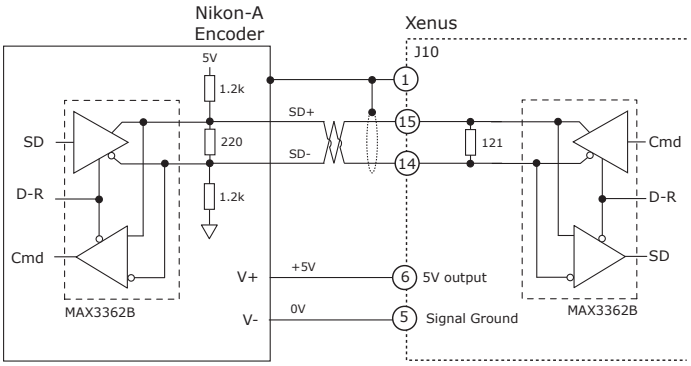

MOTOR CONNECTIONS (CONT'D)

MOTOR PHASE CONNECTIONS

The drive output is a three-phase PWM inverter that converts the DC buss voltage (+HV) into three sinusoidal voltage waveforms that drive the motor phase-coils. Cable should be sized for the continuous current rating of the motor. Motor cabling should use twisted, shielded conductors for CE compliance, and to minimize PWM noise coupling into other circuits. The motor cable shield should connect to motor frame and the drive frame ground terminal (J2-1) for best results.

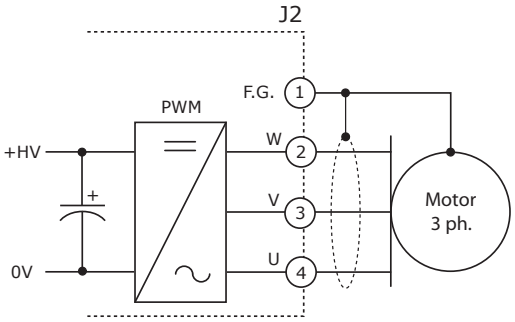

DIGITAL HALL SIGNALS

Hall signals are single-ended signals that provide absolute feedback within one electrical cycle of the motor. There are three of them (U, V, & W) and they may be sourced by magnetic sensors in the motor, or by encoders that have Hall tracks as part of the encoder disc. They typically operate at much lower frequencies than the motor encoder signals, and are used for commutation-initialization after startup, and for checking the motor phasing after the amplifier has switched to sinusoidal commutation.

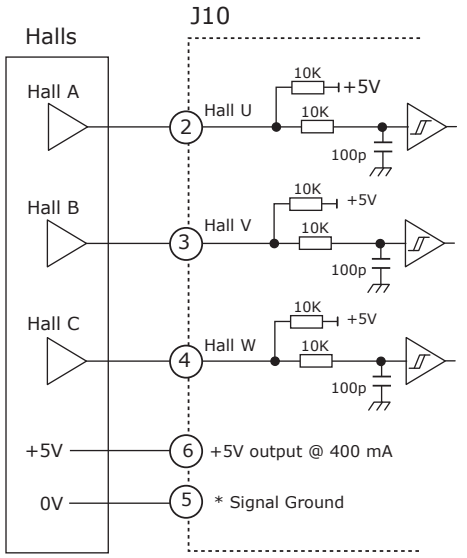

* Alternate Sgnd connections on J10 are pins 16, 25, 26

MOTOR TEMPERATURE SENSOR

Analog input [AIN3] Motemp, is for use with a motor overtemperature switch or sensor. The input voltage goes through a low-pass filter to a 12-bit A/D converter. The active level of the input, Vset, is programmable generate an over-temperature fault if the input voltage is <Vset, or >Vset.

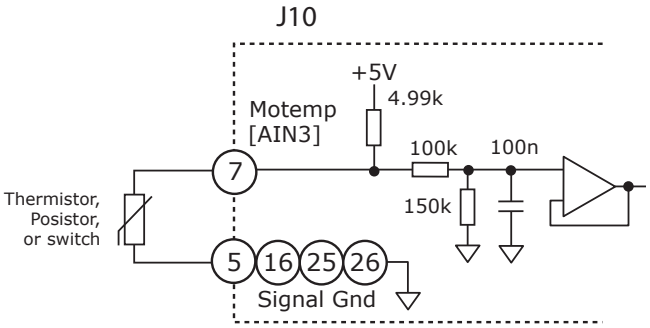

MOTOR CONNECTIONS (CONT'D)

MULTI-MODE ENCODER PORT

This port consists of three differential input/output channels that take their functions from the Basic Setup of the drive. With quad A/B encoder feedback, the port works as an output, buffering the signals from the encoder. With resolver or sin/cos encoder versions, the feedback is converted to "emulated" quad A/B/X signals with programmable resolution. These signals can then be fed back to an external motion controller that closes the position or velocity loops. As an input, the port can take quad A/B signals to produce a dual-loop position control system or use the signals as master-encoder commands in camming mode. In addition, the port can take stepper command signals (CU/CD or Pulse/Direction) in differential format.

AS BUFFERED OUTPUTS FROM A DIGITAL QUADRATURE PRIMARY ENCODER

When using a digital quadrature feedback encoder, the A/B/X signals drive the multi-mode port output buffers directly. This is useful in systems that use external controllers that also need the motor feedback encoder signals because these now come from J8, the Control connector. In addition to eliminating "Y" cabling where the motor feedback cable has to split to connect to both controller and motor, the buffered outputs reduce loading on the feedback cable that could occur if the motor encoder had to drive two differential inputs in parallel, each with it's own 121 ohm terminating resistor.

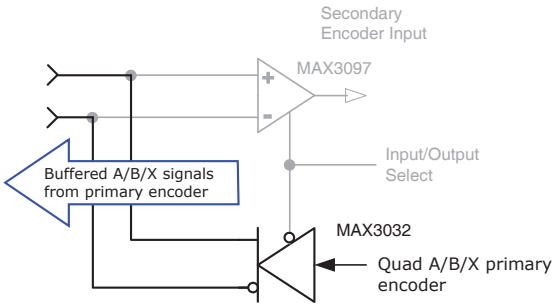

AS EMULATED QUAD A/B/X ENCODER OUTPUTS FROM AN ANALOG SIN/COS FEEDBACK ENCODER

Analog sin/cos signals are interpolated in the drive with programmable resolution. The incremental position data is then converted back into digital quadrature format which drives the multi-mode port output buffers. Some analog encoders also produce a digital index pulse which is connected directly to the port's output buffer. The result is digital quadrature A/B/X signals that can be used as feedback to an external control system.

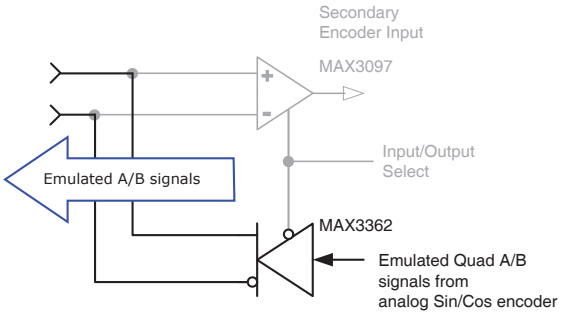

AS A MASTER OR CAMMING ENCODER INPUT FROM A DIGITAL QUADRATURE ENCODER

When operating in position mode the multi-mode port can accept digital command signals from external encoders. These can be used to drive cam tables, or as master-encoder signals when operating in a master/slave configuration.

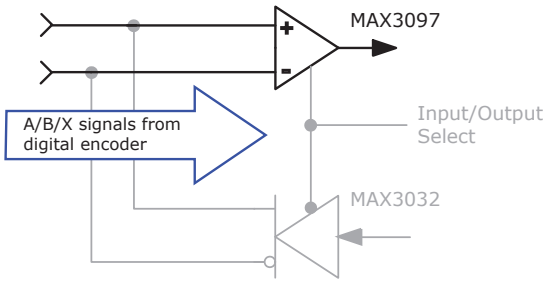

AS DIGITAL COMMAND INPUTS IN PULSE/DIRECTION, PULSE-UP/PULSE-DOWN, OR DIGITAL QUADRATURE ENCODER FORMAT

The multi-mode port can also be used when digital command signals are in a differential format. These are the signals that typically go to single-ended inputs. But, at higher frequencies these are likely to be differential signals in which case the multi-mode port can be used.

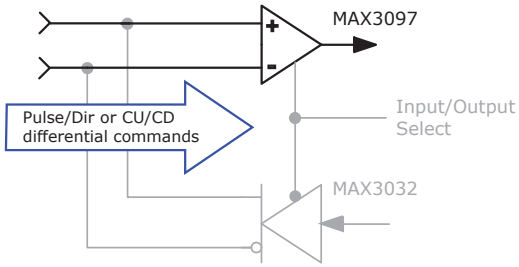

MOTOR CONNECTIONS (CONT'D)

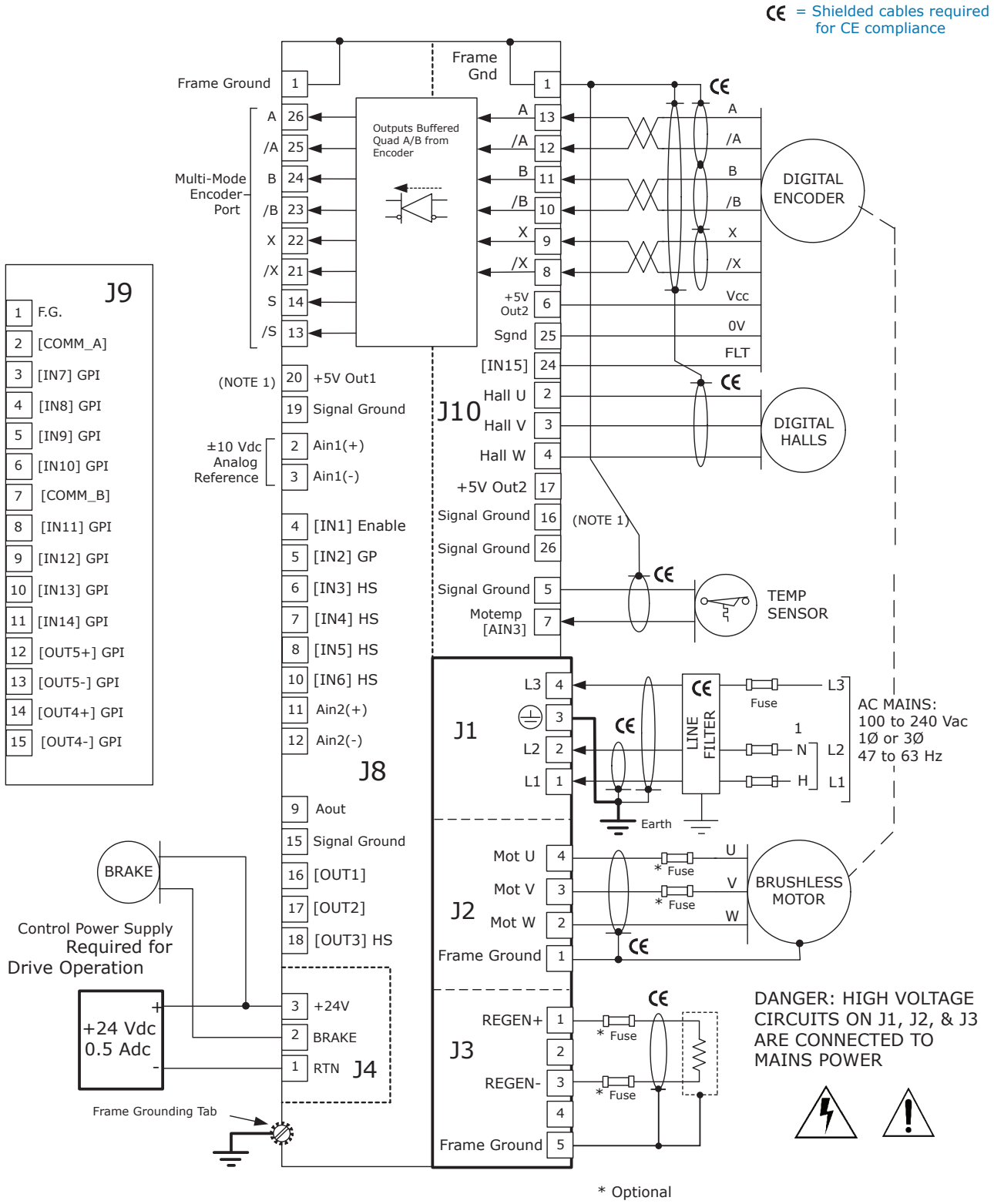

NOTES:

1) +5V Out1 and Out2 are independent power supplies and each is rated for 400 mA
2) Line filter is required for CE
3) Active signals in Multi-Mode port depend on drive configuration. All are shown for completeness.

MOTOR CONNECTIONS (CONT'D)

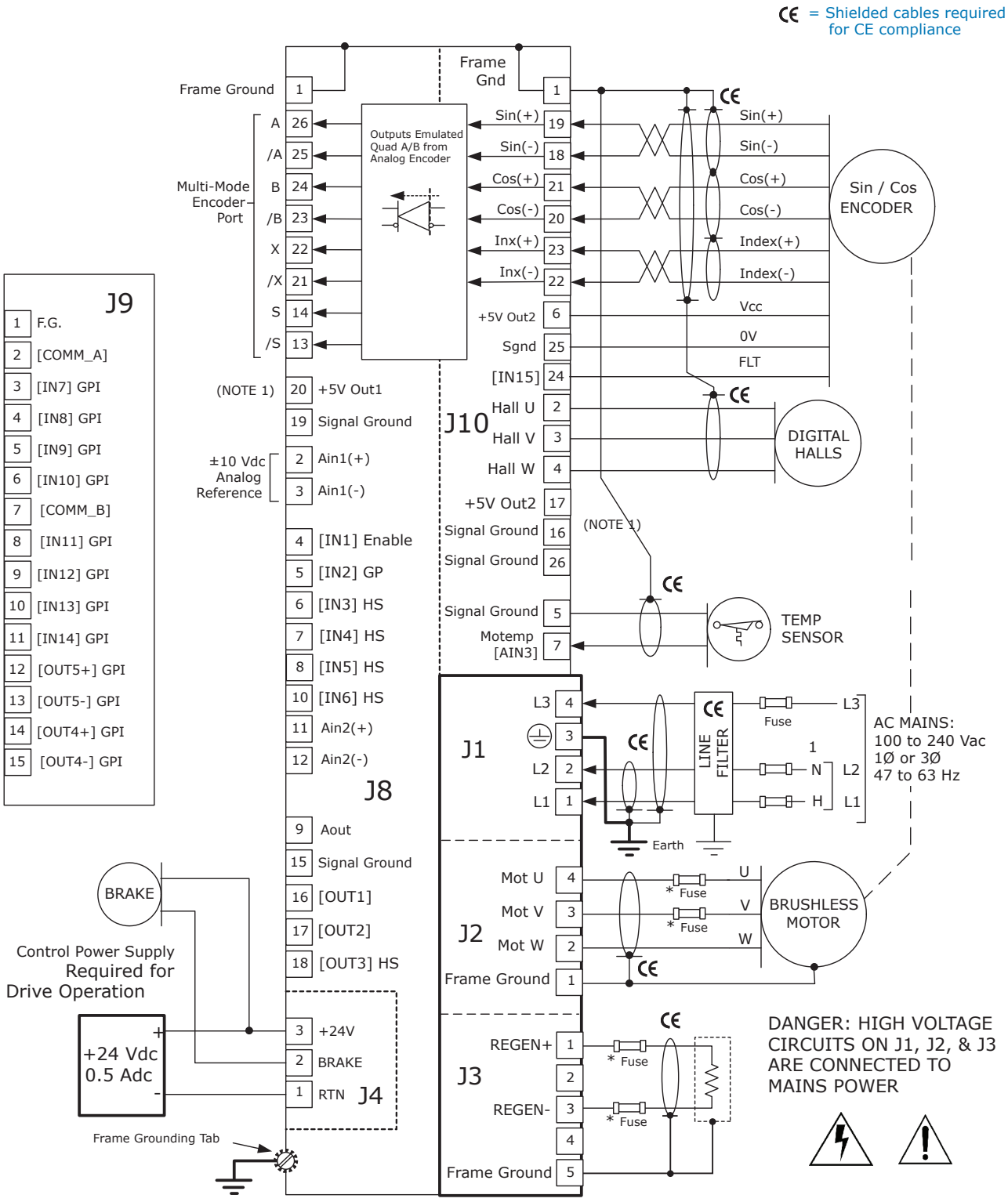

NOTES:

1) +5V Out1 and Out2 are independent power supplies and each is rated for 400 mA
2) Line filter is required for CE
3) Active signals in Multi-Mode port depend on drive configuration. All are shown for completeness.

MOTOR CONNECTIONS (CONT'D)

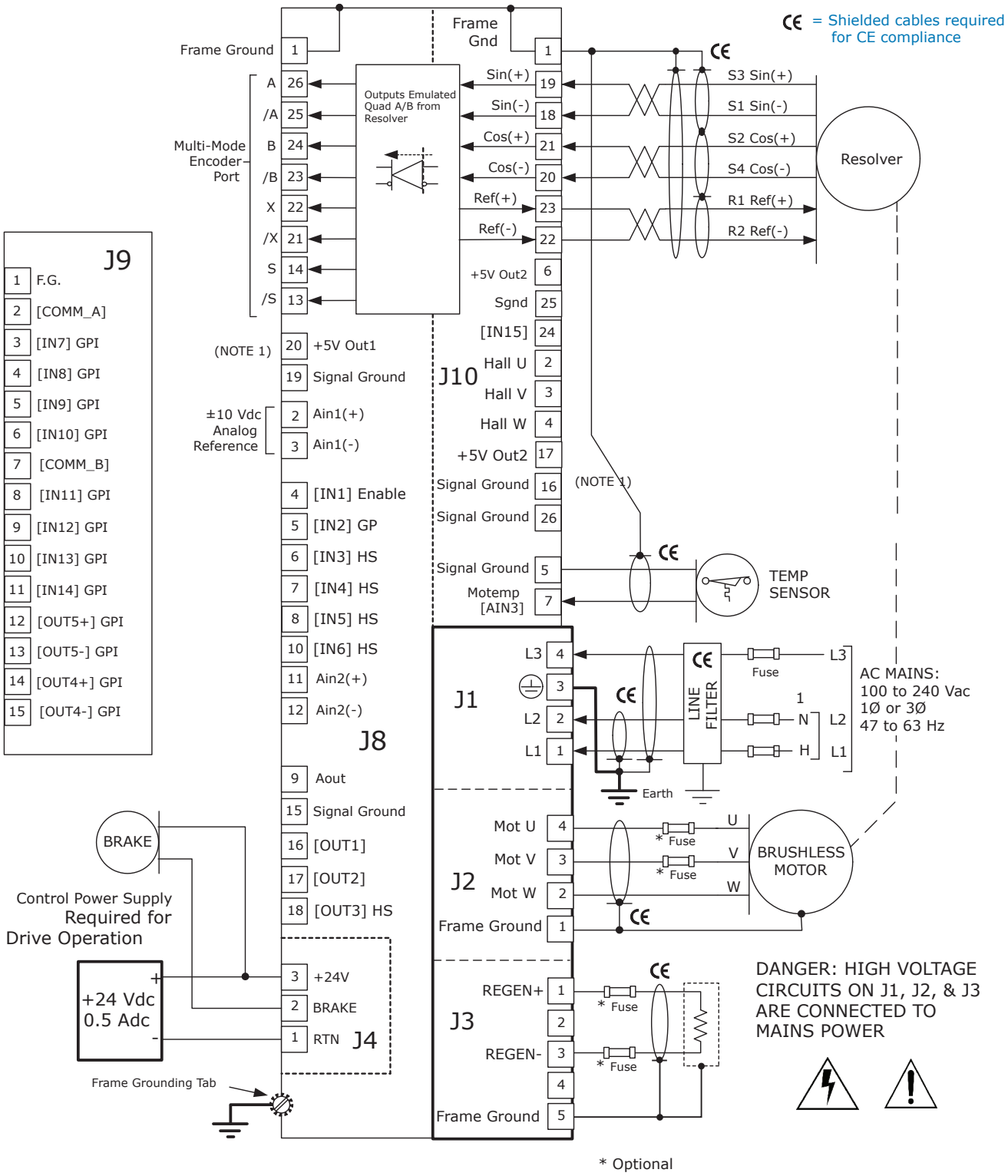

NOTES:

1) +5V Out1 and Out2 are independent power supplies and each is rated for 400 mA
2) Line filter is required for CE
3) Active signals in Multi-Mode port depend on drive configuration. All are shown for completeness.

WARNING: Hazardous voltages exist on connections to J1, J2, & J3 when power is applied, and for up to 30 seconds after power is removed.

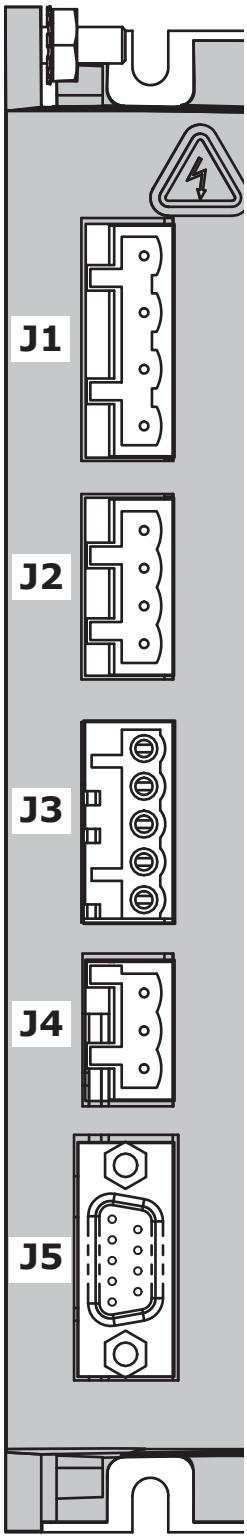

J1 CABLE CONNECTOR:
Wago: 51118287 or 721-204/026-045/RN01-0000
Euro-style 7,5 mm pluggable female terminal block
with preceding ground receptacle
Cable: AWG 12, 600 V recommended
for XPL-230-36-R and XPL-230-40-R models,
AWG 14, 600V for XPL-230-18-R
Shielded cable required for CE compliance

J1 MAINS CONNECTIONS

Signal	Pin
Mains Input L3	4
Protective Ground	3
Mains Input L2	2
Mains Input L1	1

J2 CABLE CONNECTOR:
Wago: 51118008 or 721-104/026-047/RN01-0000
Euro-style 5,0 mm pluggable female terminal block
Cable: AWG 12, 600 V recommended
for XPL-230-36-R and XPL-230-40-R models,
AWG 14, 600V for XPL-230-18-R
Shielded cable required for CE compliance

J2 MOTOR OUTPUTS

Signal	Pin
Motor Phase U	4
Motor Phase V	3
Motor Phase W	2
Cable Shield	1

J3 CABLE CONNECTOR:
Wago: 51111279 or 721-605/000-044/RN01-0000
Euro-style 5,0 mm pluggable male terminal block
Cable: AWG 12, 600 V recommended
for XPL-230-36-R and XPL-230-40-R models,
AWG 14, 600V for XPL-230-18-R
Shielded cable required for CE compliance

J3 REGEN RESISTOR

Signal	Pin
Regen Resistor	1
No Connection	2
Regen Resistor	3
No Connection	4
Cable Shield	5

WIRE INSERTION/EXTRACTION TOOL:
Used on J1, J2, J3, & J4
Wago 231-131

ISOLATED CIRCUIT

NOTE: AN EXTERNAL
+24 VDC POWER SUPPLY
IS REQUIRED FOR OPERATION

J4 CABLE CONNECTOR:
Wago: 51117974 or 721-103/026-047/RN01-0000
Euro-style 5,0 mm pluggable terminal block

J4 +24 VDC & BRAKE

Signal	Pin
+24 Vdc Control Power	3
Brake Output [OUT6]	2
0V (+24 Vdc Return)	1

ISOLATED CIRCUIT

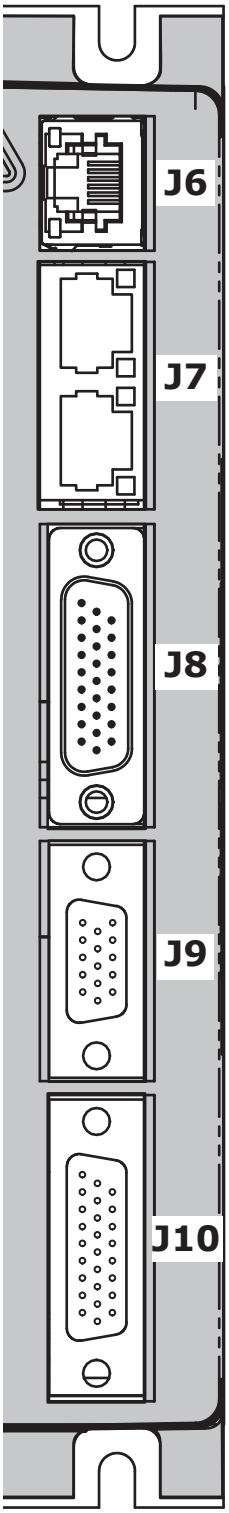

J8 CONTROL SIGNALS

PIN	SIGNAL	PIN	SIGNAL	PIN	SIGNAL
9	[AOUT]	18	[OUT3] HS	26	Multi Enc A2
8	[IN5] HS	17	[OUT2]	25	Multi Enc /A2
7	[IN4] HS	16	[OUT1]	24	Multi Enc B2
6	[IN3] HS	15	Signal Gnd	23	Multi Enc /B2
5	[IN2] GP	14	Multi Enc S2	22	Multi Enc X2
4	[IN1] GP	13	Multi Enc /S2	21	Multi Enc /X2
3	[AIN1-]	12	[AIN2-]	20	+5 Vdc Out
2	[AIN1+]	11	[AIN2+]	19	Signal Gnd
1	Frame Gnd	10	[IN6] HS		

J8 CABLE CONNECTOR:

High-Density
D-Sub female,
26 Position

J9 SECONDARY I/O CONNECTOR

PIN	SIGNAL	PIN	SIGNAL	PIN	SIGNAL
1	Frame Gnd	6	[IN10] GPI	11	[IN14] GPI
2	[COMM_A]	7	[COMM_B]	12	[OUT5+] GPI
3	[IN7] GPI	8	[IN11] GPI	13	[OUT5-] GPI
4	[IN8] GPI	9	[IN12] GPI	14	[OUT4+] GPI
5	[IN9] GPI	10	[IN13] GPI	15	[OUT4-] GPI

J9 CABLE CONNECTOR:

High-Density
D-Sub male,
15 Position

J10 FEEDBACK

PIN	SIGNAL	PIN	SIGNAL	PIN	SIGNAL
1	Frame Gnd	10	Enc /B1	19	Sin1(+)
2	Hall U	11	Enc B1	20	Cos1(-)
3	Hall V	12	Enc /A1	21	Cos1(+)
4	Hall W	13	Enc A1	22	Index1(-)
5	Signal Gnd	14	Enc /S1	23	Index1(+)
6	+5 Vdc Out	15	Enc S1	24	[IN15]
7	[AIN3] Motemp	16	Signal Gnd	25	Signal Gnd
8	Enc /X1	17	+5 Vdc Out	26	Signal Gnd
9	Enc X1	18	Sin1(-)		

J10 CABLE CONNECTOR:

High-Density
D-Sub male,
26 Position

J5 SAFETY DISABLE

PIN	SIGNAL	PIN	SIGNAL
1	Frame Gnd	6	STO-LED(+)
2	STO-1(+)	7	STO-LED(-)
3	STO-1(-)	8	24 Vdc Common
4	STO-2(+)	9	+24 Vdc Output
5	STO-2(-)		

J5 CABLE CONNECTOR:

D-Sub male,
9 Position

WARNING: Hazardous voltages exist on connections to J1, J2, & J3 when power is applied, and for up to 30 seconds after power is removed.

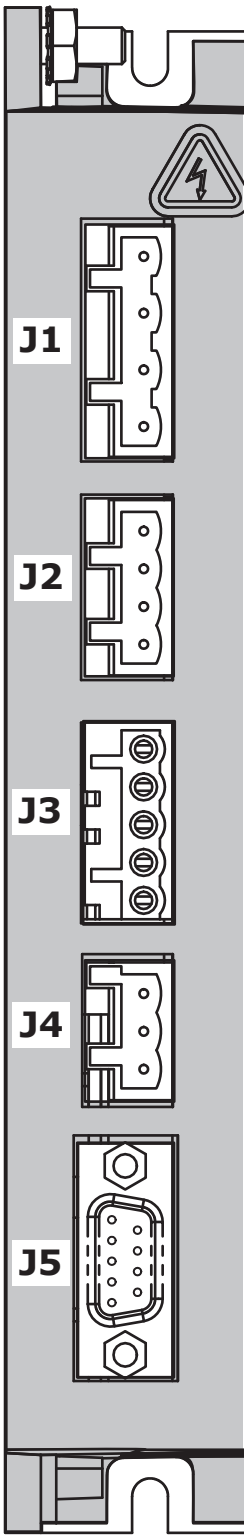

J1 CABLE CONNECTOR:
Wago: 51118287 or 721-204/026-045/RN01-0000
Euro-style 7,5 mm pluggable female terminal block with preceding ground receptacle
Cable: AWG 12, 600 V recommended for XPL-230-36-R and XPL-230-40-R models, AWG 14, 600V for XPL-230-18-R
Shielded cable required for CE compliance

J1 MAINS CONNECTIONS

Signal	Pin
Mains Input L3	4
Protective Ground	3
Mains Input L2	2
Mains Input L1	1

J2 CABLE CONNECTOR:
Wago: 51118008 or 721-104/026-047/RN01-0000
Euro-style 5,0 mm pluggable female terminal block
Cable: AWG 12, 600 V recommended for XPL-230-36-R and XPL-230-40-R models, AWG 14, 600V for XPL-230-18-R
Shielded cable required for CE compliance

J2 MOTOR OUTPUTS

Signal	Pin
Motor Phase U	4
Motor Phase V	3
Motor Phase W	2
Cable Shield	1

J3 CABLE CONNECTOR:
Wago: 51111279 or 721-605/000-044/RN01-0000
Euro-style 5,0 mm pluggable male terminal block
Cable: AWG 12, 600 V recommended for XPL-230-36-R and XPL-230-40-R models, AWG 14, 600V for XPL-230-18-R
Shielded cable required for CE compliance

J3 REGEN RESISTOR

Signal	Pin
Regen Resistor	1
No Connection	2
Regen Resistor	3
No Connection	4
Cable Shield	5

WIRE INSERTION/EXTRACTION TOOL:
Used on J1, J2, J3, & J4
Wago 231-131

ISOLATED CIRCUIT

NOTE: AN EXTERNAL +24 VDC POWER SUPPLY IS REQUIRED FOR OPERATION

J4 CABLE CONNECTOR:
Wago: 51117974 or 721-103/026-047/RN01-0000
Euro-style 5,0 mm pluggable terminal block

J4 +24 VDC & BRAKE

Signal	Pin
+24 Vdc Control Power	3
Brake Output [OUT6]	2
0V (+24 Vdc Return)	1

ISOLATED CIRCUIT

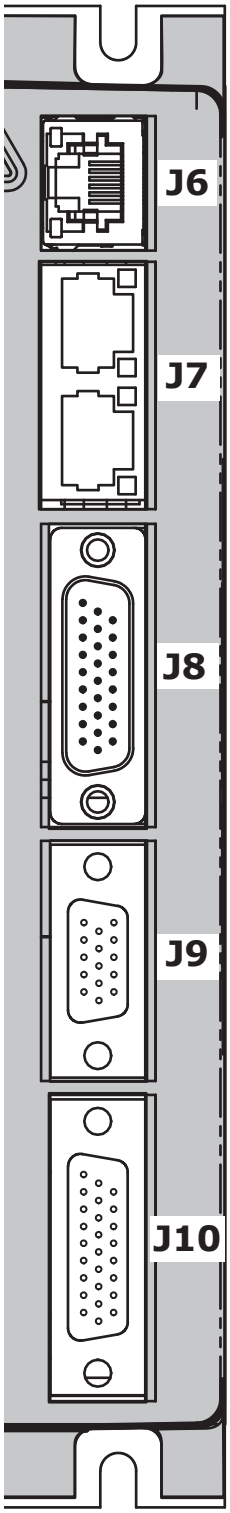

J8 CONTROL SIGNALS

PIN	SIGNAL	PIN	SIGNAL	PIN	SIGNAL
9	[AOUT]	18	[OUT3] HS	26	Multi Enc A2
8	[IN5] HS	17	[OUT2]	25	Multi Enc /A2
7	[IN4] HS	16	[OUT1]	24	Multi Enc B2
6	[IN3] HS	15	Signal Gnd	23	Multi Enc /B2
5	[IN2] GP	14	Multi Enc S2	22	Multi Enc X2
4	[IN1] GP	13	Multi Enc /S2	21	Multi Enc /X2
3	[AIN1-]	12	[AIN2-]	20	+5 Vdc Out
2	[AIN1+]	11	[AIN2+]	19	Signal Gnd
1	Frame Gnd	10	[IN6] HS		

J8 CABLE CONNECTOR:

High-Density
D-Sub female,
26 Position

J9 SECONDARY I/O CONNECTOR

PIN	SIGNAL	PIN	SIGNAL	PIN	SIGNAL
1	Frame Gnd	6	[IN10] GPI	11	[IN14] GPI
2	[COMM_A]	7	[COMM_B]	12	[OUT5+] GPI
3	[IN7] GPI	8	[IN11] GPI	13	[OUT5-] GPI
4	[IN8] GPI	9	[IN12] GPI	14	[OUT4+] GPI
5	[IN9] GPI	10	[IN13] GPI	15	[OUT4-] GPI

J9 CABLE CONNECTOR:

High-Density
D-Sub male,
15 Position

J10 FEEDBACK

PIN	SIGNAL	PIN	SIGNAL	PIN	SIGNAL
1	Frame Gnd	10	Enc /B1	19	Sin1(+) S3
2	Hall U	11	Enc B1	20	Cos1(-) S4
3	Hall V	12	Enc /A1	21	Cos1(+) S2
4	Hall W	13	Enc A1	22	Ref(-) R2
5	Signal Gnd	14	Enc /S1	23	Ref(+) R1
6	+5 Vdc Out	15	Enc S1	24	[IN15]
7	[AIN3] Motemp	16	Signal Gnd	25	Signal Gnd
8	Enc /X1	17	+5 Vdc Out	26	Signal Gnd
9	Enc X1	18	Sin1(-) S1		

J10 CABLE CONNECTOR:

High-Density
D-Sub male,
26 Position

J5 SAFETY

PIN	SIGNAL	PIN	SIGNAL
1	Frame Gnd	6	STO-LED(+)
2	STO-1(+)	7	STO-LED(-)
3	STO-1(-)	8	24 Vdc Common
4	STO-2(+)	9	+24 Vdc Output
5	STO-2(-)		

J5 CABLE CONNECTOR:

D-Sub male,
9 Position

DRIVE POWER SOURCES

An external +24 Vdc power supply is required, and powers an internal DC/DC converter that supplies all the control voltages for drive operation. Use of an external supply enables CAN communication with the drive when the mains power has been removed.

Power distribution in *XPL* is divided into three sections: +24 Vdc, signal, and high-voltage. Each is isolated from the other and all are isolated from the chassis.

EXTERNAL +24 VDC

The primary side of the DC/DC converter operates directly from the external +24 Vdc supply and is isolated from other drive power sections. The Brake output [OUT6] operates in this section and is referenced to the +24 Vdc return (0V). It sinks current from an external load connected to the external +24 Vdc power source.

INTERNAL SIGNAL POWER

The signal power section supplies power for the control circuits as well as logic inputs and outputs. Motor feedback signals such as Halls, encoder, and temperature sensor operate from this power source. All signal circuits are referenced to signal ground. This ground should connect to the control system circuit ground or common so that drive and controller inputs and output voltage levels work properly with each other.

MAINS POWER

Mains power drives the high-voltage section. It is rectified and capacitor-filtered to produce +HV which the PWM stage converts into voltages that drive either three phase brushless or DC brush motors. An internal solid-state switch together with an external power resistor provides dissipation during regeneration when the mechanical energy of the motor is converted back into electrical energy that must be dissipated before it charges the internal capacitors to an overvoltage condition. All the circuits in this section are "hot", that is, they connect directly to the mains and must be considered high-voltages and a shock hazard requiring proper insulation techniques during installation.

GROUNDING

A grounding system has three primary functions: safety, voltage-reference, and shielding. As a safety measure, the primary ground at J1-3 will carry fault-currents from the mains in the case of an internal failure or short-circuit of electronic components. Wiring to this is typically done with the green conductor with yellow stripe using the same gauge wire as that used for the mains. The pin on the drive at J1-3 is longer than the other pins on J1 giving it a first-make, last-break action so that the drive chassis is never ungrounded when the mains power is connected. This wire is a 'bonding' conductor that should connect to an earthed ground point and must not pass through any circuit interrupting devices.

All of the circuits on J1, J2, and J3 are mains-connected and must never be grounded. The ground terminals at J1-3, J2-1, and J3-5 all connect to the drive chassis and are isolated from all drive internal circuits.

Signal grounding references the drive control circuits to those of the control system. These controls circuits typically have their own earth connection at some point. To eliminate ground-loops it is recommended that the drive signal ground be connected to the control system circuit ground. When this is done the drive signal voltages will be referenced to the same 0 V level as the circuits in the control system. Small currents flow between controller and drive when inputs and outputs interact. The signal ground is the path for these currents to return to their power sources in both controller and drive.

Shields on cables reduce emissions from the drive for CE compliance and protect internal circuits from interference due to external sources of electrical noise. Because of their smaller wire gauge, these should not be used as part of a safety-ground system. Motor cases can be safety-grounded either at the motor, by earthing the frame, or by a grounding conductor in the motor cable that connects to J2-1. This cable should be of the same gauge as the other motor phase cables.

For CE compliance and operator safety, the drive heatplate should be earthed to the equipment frame. An unplated tab is provided on the heatplate (near to J1) for this connection.

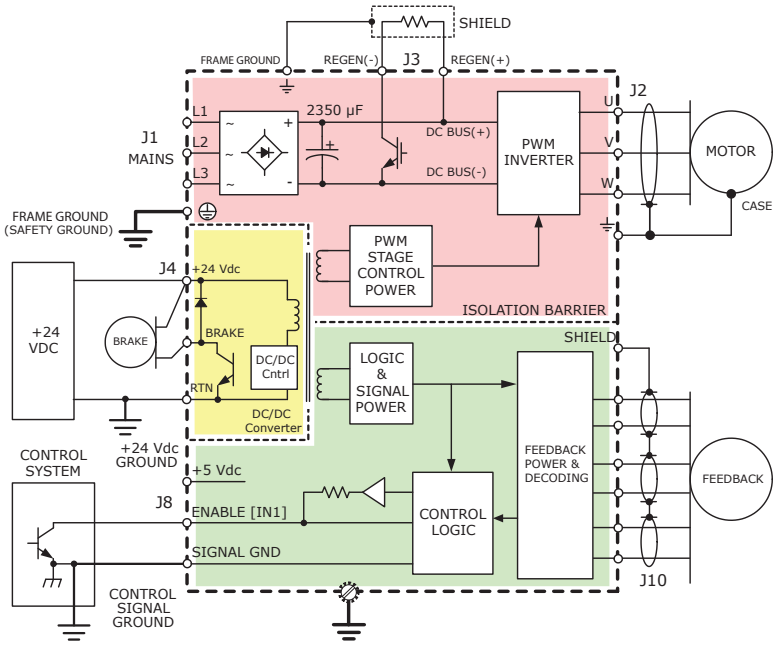

REGENERATION

The chart below shows the energy absorption in W·s for a *Xenus Plus* drive operating at some typical mains voltages. When the load mechanical energy is greater than these values an external regen resistor is available as an accessory.

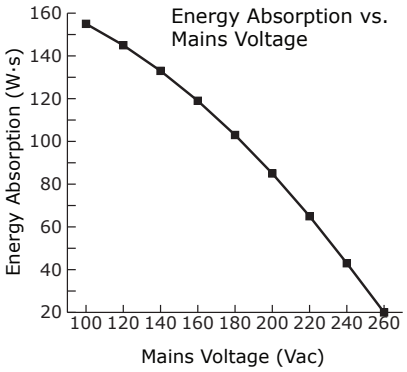

GROUNDING & SHIELDING FOR CE

Grounding and shielding are the means of controlling the emission of radio frequency energy from the drive so that it does not interfere with other electronic equipment.
The use of shielded cables to connect the drive to motors and feedback devices is a way of extending the chassis of the drive out to these devices so that the conductors carrying noise generated by the drive are completely enclosed by a conductive shield.
The process begins at the mains connector of the drive, J1. The ground terminal here has a circle around it indicating that this is the safety or "bonding" ground connection. This should be connected with wire that is the same gauge as that used for the mains. In the case of a short-circuit in the drive the function of this ground connection is to carry the fault current to earth ground until the safety device (fuse or circuit breakers) disconnects the drive from the mains. This connection ensures that the heatplate of the drive remains at earth potential and eliminating a shock hazard that could occur of the chassis were allowed to float to the potential of the mains.
While this connection keeps the heatplate at earth potential the high frequency noise generated by switching circuits in the drive can radiate from the wire used for the safety ground connection. In order to keep the path between the heatplate and earth as short as possible it's also recommended to mount the drive to the equipment panel. An unplated tab on the heatplate is provided for this and will ground the heatplate directly to the equipment frame, further reducing emissions.
The heatplate also connects directly to the frame ground terminals on the motor, feedback, and regen connectors. Note that the ground symbols for these do not have a circle around them which indicates that these are for shielding and not not for safety grounding. Motors and their feedback devices (which are typically in the motor case) should be grounded by mounting to equipment that is grounded as a safety ground. By connecting the shields for these devices at the drive and at the device, the connection is continuous and provides a return path for radio-frequency energy to the drive.

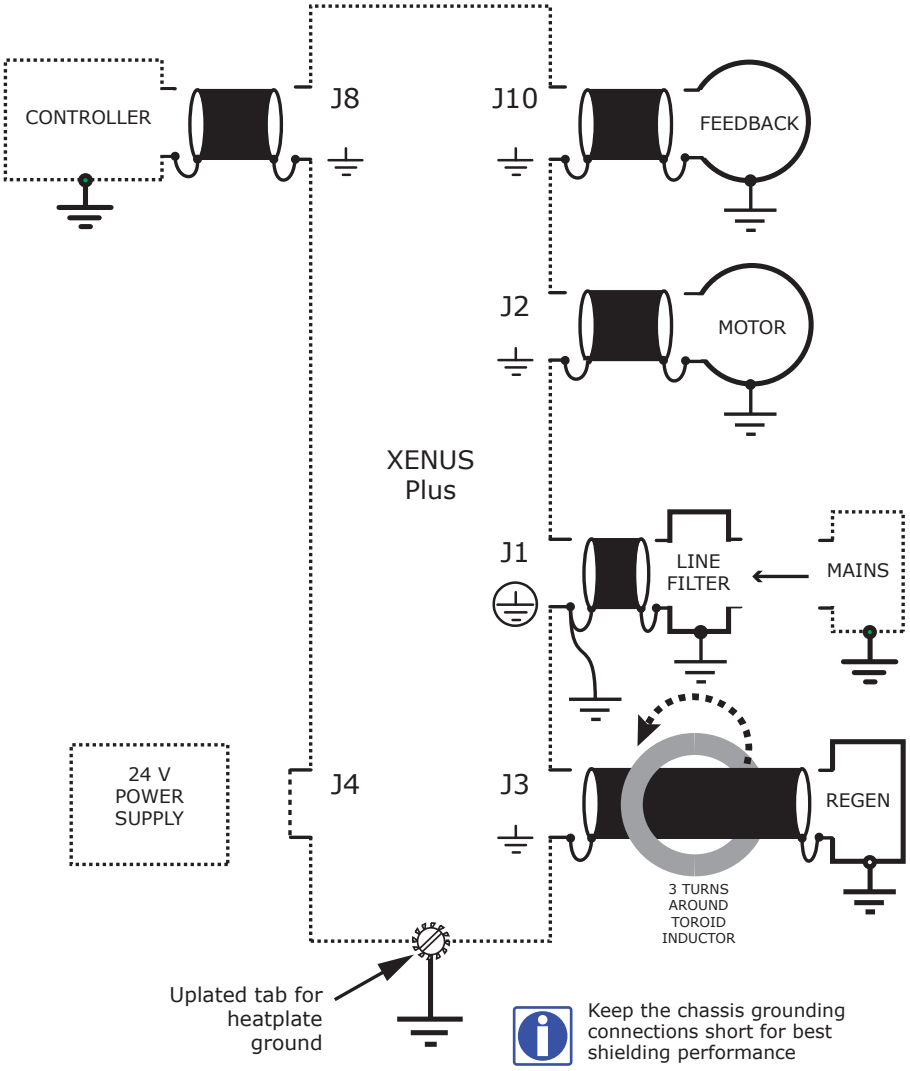

Notes:
1) Shielded cables required for CE are shown in the diagram above.
2) Line filter required for CE
3) Ferrite core (Magnetics Inc, ZW43615-TC) required for shielded cable to regen resistor which must be in shielded enclosure.

HEATSINK & FAN CONFIGURATIONS

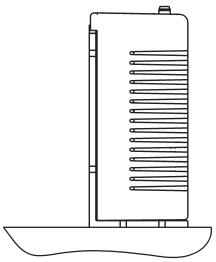

NO HEATSINK
NO FAN

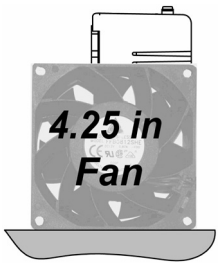

NO HEATSINK
WITH FAN

NOTE: FANS ARE NOT INCLUDED
WITH HEATSINKS OR HEATSINK KITS

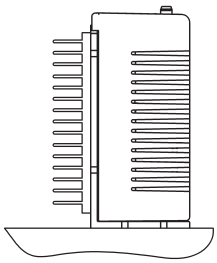

LOW-PROFILE HEATSINK
NO FAN

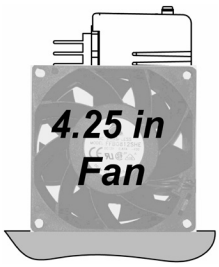

LOW PROFILE HEATSINK
WITH FAN

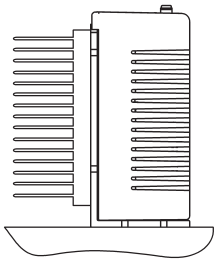

STANDARD HEATSINK
NO FAN

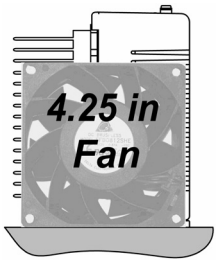

STANDARD HEATSINK
WITH FAN

HEATSINK MOUNTING

A dry-film interface pad is used in place of thermal grease. The pad is die-cut to shape and has holes for the heat sink mounting screws. There are two protective sheets, blue on one side and clear on the other. Both must be removed when the interface pad is installed.

STEPS TO INSTALL

1. Remove the blue protective sheet from one side of the pad and place the pad on the drive. Make sure that the holes in the pad align with the holes on the drive.
2. Remove the clear protective sheet from the pad.
3. Mount the heatsink onto the drive taking care to see that the holes in the heatsink, pad, and drive all line up.
4. Torque the #8-32 mounting screws to 16~20 lb-in (1.8~2.3 N·m).

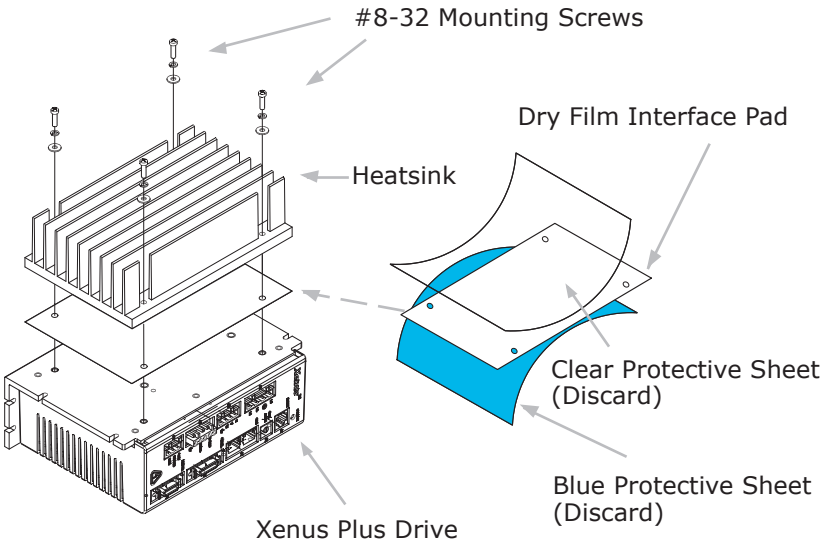

MAXIMUM OPERATING TEMPERATURE VS HEATSINK TYPE & AIR CIRCULATION

The charts below show that maximum ambient temperature vs. continuous output current for the Xenus Plus models. The cooling options are no heatsink, standard heatsink, and low-profile heatsink. For each of these the drive can be operated with convection or forced-air cooling.

XPL-230-18

Mains: 120 Vac

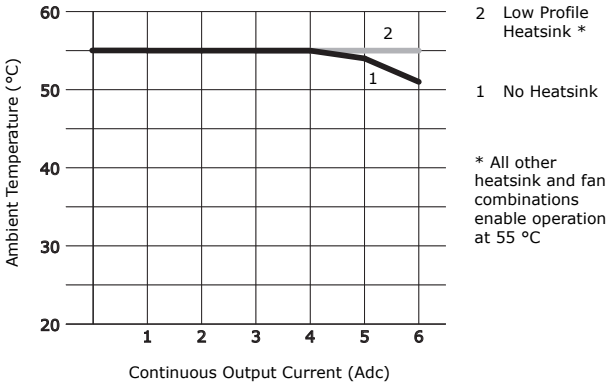

XPL-230-18

Mains: 240 Vac

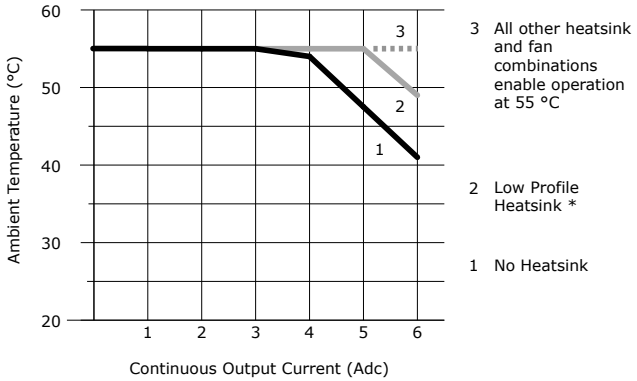

XPL-230-36

Mains: 120 Vac

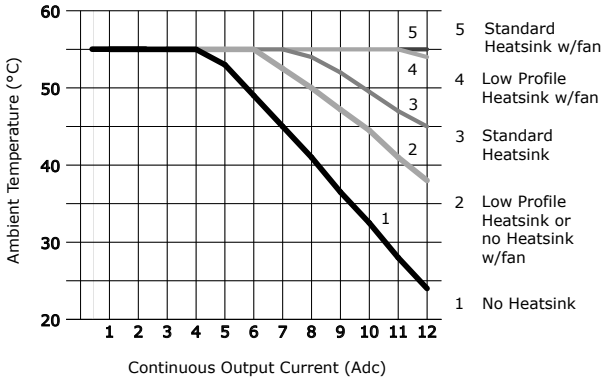

XPL-230-36

Mains: 240 Vac

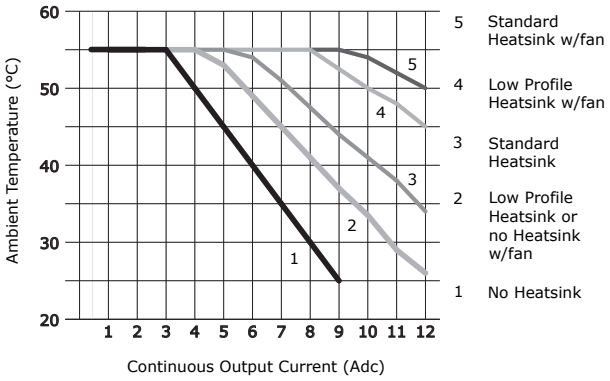

XPL-230-40

Mains: 120 Vac

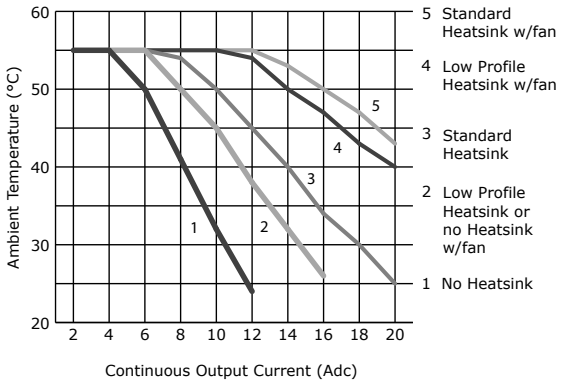

XPL-230-40

Mains: 240 Vac

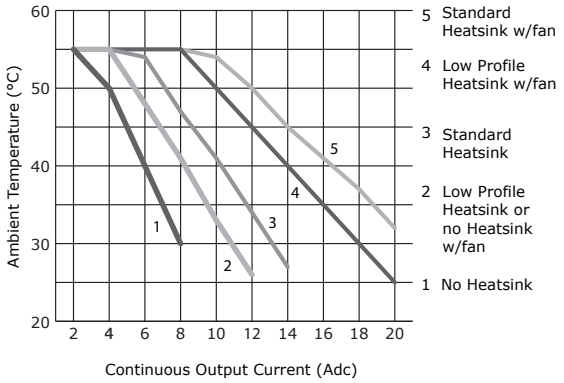

ORDERING GUIDE

XPL-230-18	*Xenus Plus* Servo Drive 6/18 Adc
XPL-230-36	*Xenus Plus* Servo Drive 12/36 Adc
XPL-230-40	*Xenus Plus* Servo Drive 20/40 Adc

Add "-R" to model number for resolver option

Example: Order one *Xenus Plus* drive, resolver version, 6/18 A with solder-cup connector Kit, *CME 2* CD, serial cable kit and small heatsink fitted at the factory:

Qty	Item	Remarks
1	XPL-230-18-R-HS	*Xenus Plus* servo drive
1	XPL-CK	Connector Kit
1	CME2	CME2 CD
1	SER-CK	Serial Cable Kit

Note: The heatsink can be fitted at the factory by adding an "-HS" or "-HL" to the drive part number to specify the standard or low-profile type. For fitting a heatsink to an drive in the field, complete kits are available (XPL-HS and XPL-HL). These kits contain the heatsink, mounting hardware, and dry-film interface.

ACCESSORIES

	QTY	REF	DESCRIPTION	MANUFACTURERS PART NUMBER
XPL-CK Connector Kit with Solder Cup Connectors for J5, J8, J9 & J10	1	J1	Plug, 4 position, 7.5 mm, female	Wago: 721-204/026-045 (Note 1)
	1	J2	Plug, 4 position, 5.0 mm, female	Wago: 721-104/026-047 (Note 1)
	1	J3	Plug, 5 position, 5.0 mm, male	Wago: 721-605/000-044 (Note 1)
	1	J4	Plug, 3 position, 5.0 mm, female	Wago: 721-103/026-047 (Note 1)
	4	J1~4	Tool, wire insertion & extraction (for J1~4)	Wago: 231-131
	1	J5	Connector, D-Sub, 9-position, male, solder cup	Norcomp: 171-009-103L001
	1		Backshell, D-Sub, RoHS, metallized, for above	Norcomp: 979-009-020R121
	1	J8	Connector, high-density D-Sub, 26 position, female, solder cup	Norcomp: 180-026-203L001
	1		Backshell, D-Sub, RoHS, metallized, for above	Norcomp: 979-015-020R121
	1	J9	Connector, high-density D-Sub, 15 position, male, solder cup	Norcomp: 180-015-103L001
	1		Backshell, D-Sub, RoHS, metallized, for above	Norcomp: 979-009-020R121
	1	J10	Connector, high-density D-Sub, 26 position, male, solder cup	Norcomp: 180-026-103L001
	1		Backshell, D-Sub, RoHS, metallized, for above	Norcomp: 979-015-020R121
SER-CK	J5		RS-232 Cable Kit	

Heatsink Kits for Field Installation (Optional)

XPL-HL Heatsink Kit Low-Profile	1		Heatsink, low-profile
	1		Heatsink thermal material
	4		Heatsink hardware
XPL-HS Heatsink Kit Standard	1		Heatsink, standard
	1		Heatsink thermal material
	4		Heatsink hardware

Regeneration Resistors (Optional)

XTL-RA-03			Regeneration resistor assembly (for XPL-230-18), 30 Ω
XTL-RA-04			Regeneration resistor assembly (for XPL-230-36 & XPL-230-40 models), 15 Ω

Edge Filter (Optional)

XTL-FA-01			Edge filter	
Edge Filter Connector Kit XTL-FK	1		Plug, 4 position, 5.0 mm, female	Wago: 721-104/026-047
	1		Plug, 5 position, 5.0 mm, male	Wago: 721-605/000-044
	2		Tool, wire insertion & extraction	Wago: 231-131

Note 1: For RoHS compliance, append "/RN01-0000" to the Wago part numbers listed above

Connectors & Software for CANopen Operation

XPL-NK	1	J7	D-Sub 9F to RJ-45 Adapter
	1		CAN bus RJ-45 terminator
	1		CAN bus network cable, 10 ft (3 m)
XPL-CV	1		D-Sub 9F to RJ-45 Adapter
XPL-NC-10	1		CAN bus Network Cable, 10 ft (3 m)
XPL-NC-01	1		CAN bus Network Cable, 1 ft (0.3 m)
XPL-NT	1		CAN bus Network Terminator
CMO			CD with CMO Software
CML			CD with CML Software (Note: license fee required)

Note: Specifications are subject to change without notice