Empire Magnetics Inc.

hat Survive - Motors That Survive - Motors That Survive

Extended Temperature Stepper Motors Frame Sizes

More Information

Frame size families:

Frame 5

Frame 11

Frame 15

Frame 17

Frame 23

Frame 34

Stepper Motors

Most production motors are useful from 0 to 100 degrees Centigrade. The HT series stepper motors are modified to provide better materials and processes intended to broaden the useful temperature range from -20 to +155 degrees Centigrade (see notes on heat losses). Consult factory for lower temperatures. Custom units can extend the high temperature limits, for lower temperatures refer to Cryogenic units.

Frame size selection:

Motors are typically made in groups or families, the families are identified by the outer diameter or size of the square, these references are called frame sizes. In the American system, a 23 frame is a nominal 2.3 inches in diameter. For motors less than one inch in diameter, the reference is typically known as a size. Herein is a list of the frame sizes offered by Empire Magnetics Inc. and some of the characteristics of the group that will allow you to select from them.

Frame Size 5: Nominal outer dimension of 0.5 inches, these motors are very low power, suitable only for instrumentation applications. Torque range of .25 to .5 oz-in. Cylindrical shaped motor.

Frame Size 11: Nominal outer dimension of 1.1 inches, these motors are very low power, suitable primarily for instrumentation applications. Torque range of .5 to 2.5 oz-in. Cylindrical shaped motor with

- Motors That Survive - Motors That Survive - Motors T

Frame 42

square front flange.

Frame Size 15: Nominal outer dimension of 1.5 inches, these motors are low power, typically used for instrumentation applications. Torque range of 5 to 10 oz-in. Cylindrical shaped motor.

Frame Size 17: Nominal outer dimension of 1.7 inches, these motors are relatively low power useful for a wide range of industrial applications. Torque range of 13 to 26 oz-in. Cylindrical shaped motor laminations, with square end flanges front and rear. Since this motor does not have a housing, it is not available in all environments.

Frame size 23: Nominal outer dimension of 2.3 inches. Extremely popular size useful for a wide range of industrial applications. Torque range of 60 to 150 oz-in. Cylindrical shaped motor with square front flange.

Frame size 34: Nominal outer dimension of 3.4 inches. Power range of 80- 240 watts, useful for a wide range of applications. Torque range of 150 to 450 oz-in. Cylindrical shaped motor with square front flange.

Frame size 42: Nominal outer dimension of 4.2 inches. Power range of 240-700 watts, relatively high power in the stepper motor range. Torque range of 400 to 1600 oz-in. Cylindrical shaped motor with square front flange.

Empire Magnetics Inc.

Extended Temperature Stepper Motors 11 Family Size - TBD Series

Options:

- Gearboxes
- Feedback Devices
- Brakes
- Cables and Connectors
- Temperature Sensors

Modifications:

- Keyways
- Custom Shafts

Speed/Torque (oz-in) Charts

CAD Drawings

Wiring Information

FAQ

Individual Motor Specifications

Model Number	HT-U11
Drawing Number	list
Environment	HT
Motor	U11
Pricing	HT-U11
NEMA Frame Size	11
Number of Magnetic Stacks	1
Step Angle	1.8
Accuracy Grade (%)	3%
Detent Torque (oz-in)	0.4
Static Torque At Thermal Current {unipolar} (oz-in)	3.0
Static Torque At Thermal Current {parallel} (oz-in)	3.0
Static Torque At Thermal Current {series} (oz-in)	3.4
Thermal Current {unipolar} (A)	0.36
Thermal Current {parallel} (A)	0.625
Thermal Current {series} (A)	0.3
Single Coil Inductance (mH)	3.5
Single Coil Resistance (ohm)	10.6
Series Inductance (mH)	14
Series Resistance (ohm)	21.2

hat Survive - Motors That Survive - Motors That Survive

Bearing Type	ball
Bearing Thrust Load (lbs)	2
Bearing Radial Load (lbs)	2
Bearing End Play (10^{-3} in)	5
Bearing Radial Play (10^{-3} in)	.6
Rotor Inertia (oz-in^2)	.02
Body Diameter (in)	1.06
Body Length (in)	1.5
Weight (oz)	4.5

- Motors That Survive - Motors That Survive - Motors T

Empire Magnetics Inc.

Frame 11
Spur Gearboxes

Empire Magnetics Inc. prepares gearboxes to operate in the same environments as the motors and resolvers. We start with high quality planetary gearboxes. These units are selected to provide maximum torque capacity with the smallest practical volume. We then upgrade the materials construction and lubrication to meet the requirements of the environment. For specific applications custom units using spur gears can be provided. Typically these are useful on very small motors such as the size 11.

Specifications

Model Number	Drawing Number	Gear Ratio	Backlash(degrees)	Min Eff (%)	Gearhead Length (in)	Weight (oz)	Max Rated Continuous Torque (oz-in)	Momentary Torque (oz-in)	Reflected Inertia (oz-in^2)(MAX)
11S:3	G2500019	3	.5/.33	90	1.27	2.5	50	100	8.19×10^{-5}
11S:5	G2500019	5	.5/.33	90	1.27	2.5	50	100	8.19×10^{-5}
11S:10	G2500019	10	.5/.33	90	1.27	2.5	50	100	8.19×10^{-5}
11S:15	G2500019	15	.5/.33	90	1.27	2.5	50	100	8.19×10^{-5}
11S:20	G2500019	20	.5/.33	90	1.27	2.5	50	100	8.19×10^{-5}
11S:30	G2500019	30	.5/.33	90	1.27	2.5	50	100	8.19×10^{-5}
11S:50	G2500019	50	.5/.33	90	1.27	2.5	50	100	8.19×10^{-5}
11S:100	G2500019	100	.5/.33	90	1.27	2.5	50	100	8.19×10^{-5}

hat Survive - Motors That Survive - Motors That Survive

Empire Magnetics Inc.

-RTD Temperature Sensor Option

The -RTD option consists of a Platinum Resistance Thermometer type sensor bonded inside the motor. This sensor has a very linear response over a wide range. Resistance is 100Ω at 0° C and varies by a nominal .39Ω per ° C.

RTD's are used to monitor motor or assembly temperature. Current to the motor should be cut if motor temperature becomes excessive. Compatible temperature controllers are available from Omega Engineering and other manufacturers.

Resistance of the sensor varies with motor temperature according to the table.

Maximum Recommended Sensing Current: 10 mA

Maximum Recommended Sensing Voltage: 1 VDC

Cables: The RTD is supplied with a two wire shielded cable, the length of the cable will match that of the assembly. For example, a motor ordered with a 10 foot cable and RTD will come with two ten foot

Sensor Resistance VS Motor Temperature

Temperature ° C	Ohms		Temperature ° C	Ohms
-45	82.3		55	121.3
-40	84.3		60	123.2
-35	86.3		65	125.2
-30	88.2		70	127.1
-25	90.2		75	129.0
-20	92.2		80	130.9
-15	94.1		85	132.8
-10	96.1		90	134.7
-5	98.0		95	136.6
0	100.0		100	138.5
5	101.9		105	140.4
10	103.9		110	142.3
15	105.8		115	144.2
20	107.8		120	146.1
25	109.7		125	147.9
30	111.7		130	149.8
35	113.6		135	151.7

hat Survive - Motors That Survive - Motors That Survive

cables, one for the motor, one for the RTD. As a result the price for the cable option is doubled.

One source of set point monitors is Omega the model 6132h-RTD 0/600C. These monitors can be obtained by calling 800-826-6342 or 203-359-1660 or linking to their web site.

40	115.5	140	153.6
45	117.5	145	155.4
50	119.4	150	157.3

- Motors That Survive - Motors That Survive - Motors That Survive - Motors T

Empire Magnetics Inc.

Extended Temperature (-HT) Stepper Motors
Drawings By Frame Size

Frame 11
Frame 15
Frame 17
Frame 23
Frame 34
Frame 42

Frame 11

Title	Drawing Number	Description
S/V-LD11	M2400260	Stepper Motor
S\VX-U11	M2400246	Stepper Motor
-R	M3100004	Resolver option
11P:3.5,10,15,20,30,50,100	G2500019	Precision Spur Gearhead

Frame 15

Title	Drawing Number	Description
U15	M2400279	Stepper Motor
15P:3.5,10,15,20,30,50,100	G2500020	Precision Spur Gearhead

Frame 17

Title	Drawing Number	Description
HT-U17-X	M2400553	Extended Temperature Stepper Motor
17P:3,4,5.5,7,10	G2500001	Planetary Gearhead, Single Stage
17P:16,22,28,40,49,55,70,100	G2500002	Planetary Gearhead, Double Stage
17P:160,280,400,700	G2500021	Planetary Gearhead, Triple Stage
17P:4,5.5,7,10	G2500022	Planetary Gearhead, R/A, Triple Stage
17P:16,22,28,40,49,55,70,100	G2500023	Planetary Gearhead, R/A, Double Stage

Frame 23

Title	Drawing Number	Description
HT-U2X	M2400284	Extended Temperature Stepper Motor
HT-U2X-R	M2400299	Extended Temperature Stepper Motor with Resolver
HT-U2X-23P:XXX	M2400289	Extended Temperature Stepper Motor with Planetary Gearbox
HT-U2X-B1X	M2400294	Extended Temperature Stepper Motor with Brake
U2X-P23:XXX-R(E)	M2400102	Motor with Gearbox and Resolver
HT-U2X-B1X-R	M2400304	Extended Temperature Stepper Motor with Brake and Resolver
U2X-P23:XXX-B1X	M2400101	Motor with Gearbox and Brake
U2X-P23:XXX-B1X-R(E)	M2400100	Motor with Gearbox, Brake and Resolver
23P:3,4,5.5,7,10	G2500003	Planetary Gearhead, Single Stage
23P:16,22,28,40,49,55,70,100	G2500004	Planetary Gearhead, Double Stage
P23:3,5,10	G2500011	Planetary Gear, Attachment specs
P23:25,75,100,175,225	G2500012	Planetary Gear, Attachment specs
23P:160,280,400,700	G2500024	Planetary Gearhead, Triple Stage
23P:4,5.5,7,10	G2500025	Planetary Gearhead, R/A, Single Stage
23P:16,22,28,40,49,55,70,100	G2500026	Planetary Gearhead, R/A, Double Stage

vive - Motors That Survive - Motors That Survive - Motors That Survive

t Survive - Motors That Survive - Motors That Survive - Motors That Sur

Frame 34

Title	Drawing Number	Description
HT-U3X-C220-R	M2400239	High Temperature Class 220 Stepper motor with resolver
DPHT-U3X-P128:1-R	M2400106	High Temperature Dustproof Stepper Motor with Planetary Gearbox and Resolver
U3X-P34:XXX-R(E)	M2400105	Motor with Gearbox and Resolver
U3X-P34:XXX-B2X	M2400104	Motor with Gearbox and Brake
U3X-P34:XXX-B2X-R(E)	M2400103	Motor with Gearbox, Brake and Resolver
34P:3,4,5.5,7,10	G2500005	Planetary Gearhead, Single Stage
34P:16,22,28,40,49,55,70,100	G2500006	Planetary Gearhead, Double Stage
P34:3,5,10	G2500013	Planetary Gear, Attachment specs
P34:25,75,100,175,225	G2500014	Planetary Gear, Attachment specs
34P:160,280,400,700	G2500027	Planetary Gearhead, Triple Stage
34P:4,5.5,7,10	G2500028	Planetary Gearhead, R/A, Single Stage
34P:16,22,28,40,49,55,70,100	G2500029	Planetary Gearhead, R/A, Double Stage

Frame 42

Title	Drawing Number	Description
U42-56C	M2400061	Stepper Motor with 56C Flange
42P:3,4,5.5,7,10	G2500007	Planetary Gearhead, Single Stage
42P:16,22,28,40,49,55,70,100	G2500008	Planetary Gearhead, Double Stage
42P:160,280,400,700	G2500030	Planetary Gearhead, Triple Stage
42P:4,5.5,7,10	G2500031	Planetary Gearhead, R/A, Single Stage
42P:16,22,28,40,49,55,70,100	G2500032	Planetary Gearhead, R/A, Double Stage

- Motors That Survive - Motors That Survive - Motors That Survive -

Empire Magnetics Inc.

Price Builder

Environment	Extended temperature range (HT)	November 3rd, 2005	
Group	Motor - Stepper	Lot charge	First unit
Motor	Stepper Motor (U11)	$ 425.00	$ 1,762.00
Gearbox	- none -	$ 0.00	$ 0.00
Resolver	- none -	$ 0.00	$ 0.00
RTD	- none -	$ 0.00	$ 0.00
Brake	- none -	$ 0.00	$ 0.00
Cable	- none -	$ 0.00	$ 0.00
Shaft	- none -	$ 0.00	$ 0.00
Subtotal		**$ 425.00**	**$ 1,762.00**
Model	**HT-U11**		
First Unit Price		**$ 2,187.00**	

Quantity	2 - 4	5 - 9	10 - 24
Price	$ 1,762.00	$ 1,585.80	$ 1,427.22

Pricing Details

Empire Magnetics Inc.

Torque Chart for Stepper Motor U11

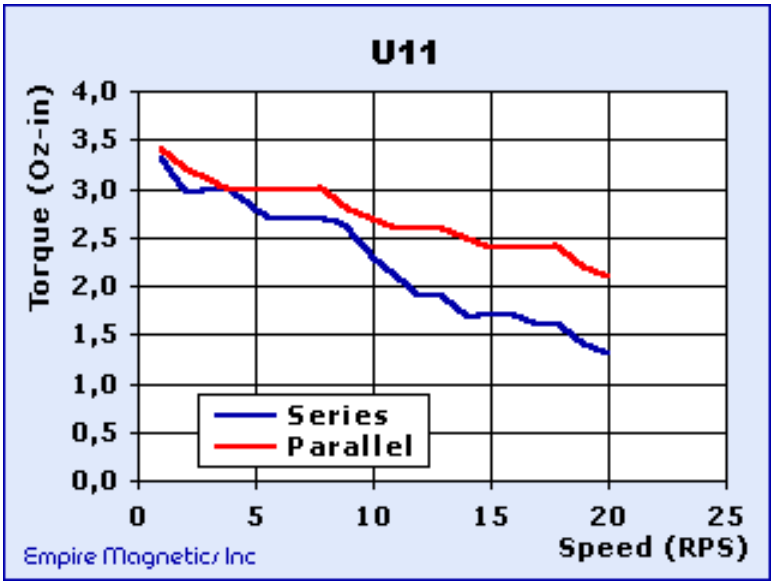

Series connection		Parallel connection	
Speed (RPS)	Torque (oz-in)	Speed (RPS)	Torque (oz-in)
1	3,3	1	3,4
2	3	2	3,2
3	3	3	3,1
4	3	4	3
5	2,8	5	3
6	2,7	6	3
7	2,7	7	3
8	2,7	8	3
9	2,6	9	2,8
10	2,3	10	2,7
11	2,1	11	2,6
12	1,9	12	2,6
13	1,9	13	2,6
14	1,7	14	2,5
15	1,7	15	2,4
16	1,7	16	2,4
17	1,6	17	2,4
18	1,6	18	2,4
19	1,4	19	2,2
20	1,3	20	2,1

Series		Inductance (Mh)	DCR (Ohm)
Phase A	Series Connected	14.6	22.1
Phase B	Series Connected	14.6	22.1

Holding torque single phase energized at 0.5A DC = 4 oz.in. **
°C rise - Motor center mounted to 3.5" diameter. x 0.676" thick alum heat sink, with thermal compound between motor and heat sink. Motor and heat sink in still air at 20° C ambient. The heat sink was sitting on a wooden bench, so that one face of 3.5" diameter was insulated. With a single phase energized with 0.5 amps of current, for 1 hour, in still air, the motor temperature rise was 55° C.
Under similar conditions, with the motor laying on its side, without benefit of the heat sink, using 0.5 amps of current into a single phase the motor temperature rise above ambient was 80° C. *

Motors That Survive - Motors That Survive - Motors That Survive

Parallel		Inductance (Mh)	DCR (Ohm)
Phase A	Parallel Connected	3.8	5.3
Phase B	Parallel Connected	3.8	5.3

Holding torque single phase energized at 0.85A DC = 4 oz.in. **
°C. rise - Motor center mounted to 3.5" diameter. x 0.676" thick alum heat sink, with thermal compound between motor and heat sink. Motor and heat sink in still air at 20° C ambient. The heat sink was sitting on a wooden bench, so that one face of 3.5" diameter was insulated. With a single phase energized with 0.85 amps of current, for 1 hour, in still air, the motor temperature rise was 45° C.
Under similar conditions, with the motor laying on its side, without benefit of the heat sink, using 0.85 amps of current into a single phase the motor temperature rise above ambient was 72° C. *

** If total temperature of C rise, plus ambient, is elevated beyond 125 C, it will be necessary to reduce input current. Or improve heat sinks.
* In a vacuum it is assumed unit will be mounted to a heatsink that will conduct heat out of the chamber. The values shown will approximate the expected °C. rise in a vacuum when mounted to the external heatsink and the total temperature, °C rise and ambient should not exceed 125° C.

Calculated torque speed curves for various voltages here

| **Personal Toolbar** | Home | About EMI | Products | Contact EMI | FAQ | Site Map |
| Model Builder | Technical Articles | Technical Drawings |

That Survive - Motors That Survive - Motors That Survive - Mo

Empire Magnetics Inc.

Wiring Diagram for
Frame 11 Extended Temperature (-HT) Stepper Motors

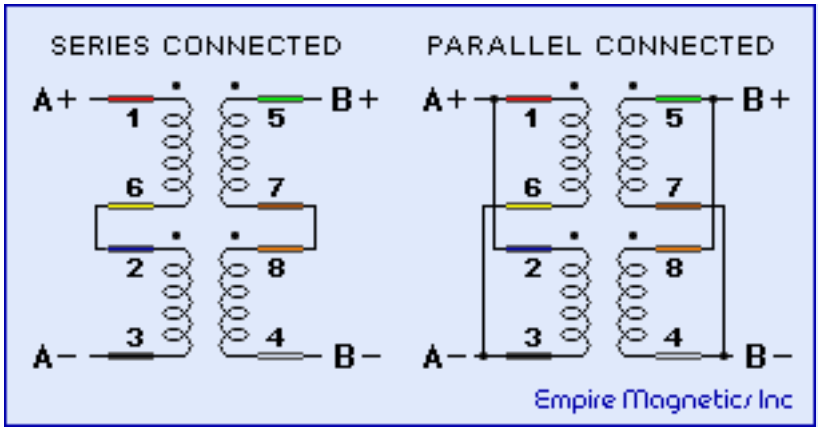

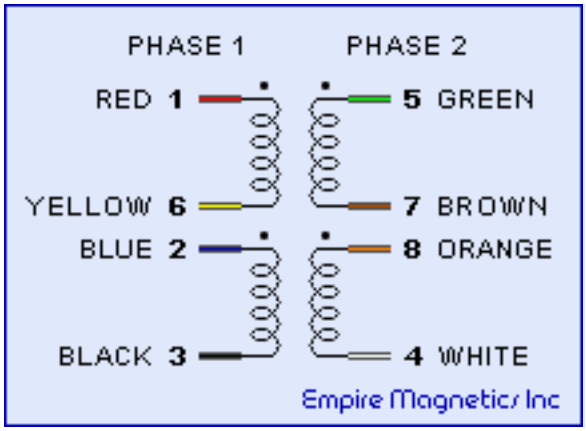

Standard Configuration is 8 Individual Lead Wires
Minimum 12 inches in Length

Motor model	Wire size	Wire diameter (Inches)
U11	AWG22	0.0281

Cable information: When optional cables are ordered on U11 motors, it is necessary to specify series or parallel connections. Since there is not enough space inside the size 11 motor to install a cable, optional cable when ordered, is connected on the exterior of the motor with in-line splices.

Empire Magnetics Part number 00-0510-0001 four conductors of 22 AWG, with overall shield and jacket, nominal cable OD .163 inches, minimum bend radius .815 inches. Stranded silver-coated copper conductors, insulated with extruded TFE Teflon. Color-coded, cabled, silver-plated copper braid shield. White TFE Teflon tape-wrapped jacket, mil-w-16878/4, temp. rating -65° to 200° C, voltage: 600V (RMS)

| **Personal Toolbar** | Home | About EMI | Products | Contact EMI | FAQ | Site Map |
| Model Builder | Technical Articles | Technical Drawings |

hat Survive - Motors That Survive - Motors That Survive

Empire Magnetics Inc.

hat Survive - Motors That Survive - Motors That Survive

Extended Temperature Stepper Motors 15 Family Size - U Series

Options:

- Gearboxes
- Feedback Devices
- Brakes
- Cables and Connectors
- Temperature Sensors

Modifications:

- Keyways
- Custom Shafts

Speed/Torque (oz-in) Charts

CAD Drawings

FAQ

Individual Motor Specifications

Model Number	VC-U15
Drawing Number	list
Environment	VC
Motor	U15
Pricing	VC-U15
NEMA Frame Size	15
Number of Magnetic Stacks	1
Step Angle	1.8
Function	2 phase hybrid
Steps/Revolution	200
Input Current Per Phase (series) (A)	1.0
Input Current Per Phase Parallel (A)	1.8
Inductance per Phase (mh) Ref	2.39
Accuracy Grade (%)	3
Holding Torque (oz-in) Min	17
Dynamic Torque (oz-in) Ref	11
Detent Torque (oz-in) Ref	1.0
Static Torque At Thermal Current {unipolar} (oz-in)	15
Static Torque At Thermal Current {parallel} (oz-in)	17
Static Torque At Thermal Current {series} (oz-in)	18

Thermal Current {unipolar} (A)	1.05
Thermal Current {parallel} (A)	1.48
Thermal Current {series} (A)	.75
Single Coil Inductance (mH)	3.50
Single Coil Resistance (ohm)	2.30
Series Inductance (mH)	14.00
Series Resistance (ohm)	4.60
Bearing Type	Ball
Bearing Thrust Load (lbs)	5.00
Bearing Radial Load (lbs)	10.00
Bearing End Play (10^{-3} in)	5.00
Bearing Radial Play (10^{-3} in)	.70
Shaft Radial Play Max	.0006
Shaft End Play Max (1)	.005
Rotor Inertia (oz-in^2) Ref	.136
Body Diameter (in)	1.51
Length (L) Max	2.00
Lead Wires (total)	8
Lead Length (in)	12
Weight (lbs) Max	0.7

- Motors That Survive - Motors That Survive - Motors T

Empire Magnetics Inc.

Frame 15
Spur Gearboxes

Empire Magnetics Inc. prepares gearboxes to operate in the same environments as the motors and resolvers. We start with high quality planetary gearboxes. These units are selected to provide maximum torque capacity with the smallest practical volume. We then upgrade the materials construction and lubrication to meet the requirements of the environment. For specific applications custom units using spur gears can be provided.

Specifications

Model Number	Drawing Number	Gear Ratio	Backlash(degrees)	Min Eff (%)	Gearhead Length (in)	Weight (oz)	Max Rated Continuous Torque (oz-in)	Momentary Torque (oz-in)	Reflected Inertia (oz-in^2)(MAX)
15S:3	G2500020	3	.5/.33	90	1.512	2.4	85	125	2.18×10^{-4}
15S:5	G2500020	5	.5/.33	90	1.512	2.4	85	125	2.18×10^{-4}
15S:10	G2500020	10	.5/.33	90	1.512	2.4	85	125	2.18×10^{-4}
15S:15	G2500020	15	.5/.33	90	1.512	2.6	85	125	2.18×10^{-4}
15S:20	G2500020	20	.5/.33	90	1.512	2.6	85	125	2.18×10^{-4}
15S:30	G2500020	30	.5/.33	90	1.512	2.6	85	125	2.18×10^{-4}
15S:50	G2500020	50	.5/.33	90	1.512	2.6	85	125	2.18×10^{-4}
15S:100	G2500020	100	.5/.33	90	1.512	2.6	85	125	2.18×10^{-4}

hat Survive - Motors That Survive - Motors That Survive

Add Page to Fax List - 1514

Send Complete Fax List

- Motors That Survive - Motors That Survive - Motors T

- Motors That Survive - Motors That Survive - Motors That Survive -

Empire Magnetics Inc.

Price Builder

Environment	Extended temperature range (HT)	November 3rd, 2005	
Group	Motor - Stepper	Lot charge	First unit
Motor	Stepper Motor (U15)	$ 1,075.00	$ 1,699.00
Gearbox	- none -	$ 0.00	$ 0.00
Resolver	- none -	$ 0.00	$ 0.00
RTD	- none -	$ 0.00	$ 0.00
Brake	- none -	$ 0.00	$ 0.00
Cable	- none -	$ 0.00	$ 0.00
Shaft	- none -	$ 0.00	$ 0.00
Subtotal		**$ 1,075.00**	**$ 1,699.00**
Model	**HT-U15**		
First Unit Price		**$ 2,774.00**	

Quantity	2 - 4	5 - 9	10 - 24
Price	$ 1,699.00	$ 1,529.10	$ 1,376.19

Pricing Details

Empire Magnetics Inc.

Extended Temperature Stepper Motors 17 Family Size - U Series

Options:

- Gearboxes
- Feedback Devices
- Brakes
- Cables and Connectors
- Temperature Sensors

Modifications:

- Keyways
- Custom Shafts

Speed/Torque (oz-in) Charts

- U17-1
- U17-2

CAD Drawings

Wiring Information

FAQ

Individual Motor Specifications

Model Number	HT-U17-1	HT-U17-2
Drawing Number	list	list
Environment	HT	HT
Motor	U17-1	U17-2
Pricing	HT-U17-1	HT-U17-2
NEMA Frame Size	17	17
Number of Magnetic Stacks	1	2
Step Angle	1.8	1.8
Accuracy Grade (%)	3	3
Detent Torque (oz-in)	1	2.2
Static Torque At Thermal Current {unipolar} (oz-in)	11	22
Static Torque At Thermal Current {parallel} (oz-in)	15	32
Static Torque At Thermal Current {series} (oz-in)	15	32
Thermal Current {unipolar} (A)	0.85	0.72
Thermal Current {parallel} (A)	0.85	1.08
Thermal Current {series} (A)	0.36	0.54
Single Coil Inductance (mH)	3.5	3.5
Single Coil Resistance (ohm)	4.8	4.8
Series Inductance (mH)	13.4	14

hat Survive - Motors That Survive - Motors That Survive

Series Resistance (ohm)	11.1	8.7
Bearing Type	C/F	C/F
Bearing Thrust Load (lbs)	1	1
Bearing Radial Load (lbs)	2	2
Bearing End Play (10^{-3} in)	C/F	C/F
Bearing Radial Play (10^{-3} in)	10	10
Rotor Inertia (oz-in^2)	0.13	0.19
Body Diameter (in)	1.7	1.7
Body Length (in)	1.59	1.85
Weight (lbs)	0.6	0.8

- Motors That Survive - Motors That Survive - Motors T

Empire Magnetics Inc.

Frame 17
Planetary Gearboxes

Empire Magnetics Inc. prepares gearboxes to operate in the same environments as the motors and resolvers. We start with high quality planetary gearboxes. These units are selected to provide maximum torque capacity with the smallest practical volume. We then upgrade the materials construction and lubrication to meet the requirements of the environment.

(text continued under table)

Specifications

Model Number	Drawing Number	Gear Ratio	Backlash (degrees)	Min Eff. (%)	Gearhead Length (in)	Wt. (lbs)	Max. Rated Contin. Torque (in-lb)	Momentary Torque (in-lb)	Reflected Inertia (oz-in^2)
17P:3	M2500001	3	0.10	90	2.50	1	130	200	0.117
17P:4	M2500001	4	0.10	90	2.50	1	140	210	0.0986
17P:5.5	M2500001	5.5	0.10	90	2.50	1	155	240	0.0806
17P:7	M2500001	7	0.10	90	2.50	1	160	250	0.0709
17P:10	M2500001	10	0.10	90	2.50	1	130	200	0.0616
17P:16	M2500002	16	0.17	85	3.10	1.6	610	960	0.1167
17P:22	M2500002	22	0.17	85	3.10	1.6	750	1175	0.0947
17P:28	M2500002	28	0.17	85	3.10	1.6	875	1350	0.0939
17P:40	M2500002	40	0.17	85	3.10	1.6	775	1200	0.0605
17P:49	M2500002	49	0.17	85	3.10	1.6	575	900	0.0684
17P:55	M2500002	55	0.17	85	3.10	1.6	665	1040	0.0602
17P:70	M2500002	70	0.17	85	3.10	1.6	600	925	0.0601
17P:100	M2500002	100	0.17	85	3.10	1.6	400	625	0.0600

hat Survive - Motors That Survive - Motors That Survive

Gearboxes for stepper motors and brushless motors are designed for the accurate positional functions desired of such systems.
All of the planetary gearheads provide "in line" power transfer so there is no offset from the motor shaft to the output shaft of the gearhead.
Vacuum rated gearboxes have all the materials selected or replaced with items that are compatible with VC, VS, or VX grades. The VS and VX grades are cleaned in the same exacting fashion as other components of this vacuum level.
For VX grade we offer dry film lubrications as an option, while the vapor pressure is lower on dry film lubrications, the wear life is also lower. The application specifics must be considered to make the decision.
Planetary gearboxes are available for stepper motors from size 17 to size 65, adapted versions of these same gearboxes can be mounted to brushless servo motors as well.

Other gearbox types:

For specific applications custom units using spur gears can be provided. Typically these are useful on very small motors such as the size 11.
In other applications where weight or space is highly constrained, we can offer harmonic style gearboxes. These gearboxes offer high ratios (but not low ones) in a compact lightweight design. They offer low backlash, but they are not as stiff as the other gearboxes. They do offer smooth motions for tool path applications.

Add Page to Fax List - 1039

Send Complete Fax List

- Motors That Survive - Motors That Survive - Motors T

- Motors That Survive - Motors That Survive - Motors That Survive -

Empire Magnetics Inc.

Price Builder

Environment	Extended temperature range (HT)	November 3rd, 2005	
Group	Motor - Stepper	Lot charge	First unit
Motor	Stepper Motor (U17-1)	$ 65.00	$ 1,100.00
Gearbox	- none -	$ 0.00	$ 0.00
Resolver	- none -	$ 0.00	$ 0.00
RTD	- none -	$ 0.00	$ 0.00
Brake	- none -	$ 0.00	$ 0.00
Cable	- none -	$ 0.00	$ 0.00
Shaft	- none -	$ 0.00	$ 0.00
Subtotal		**$ 65.00**	**$ 1,100.00**
Model	**HT-U17-1**		
First Unit Price		**$ 1,165.00**	

Quantity	2 - 4	5 - 9	10 - 24
Price	$ 1,100.00	$ 990.00	$ 891.00

Pricing Details

- Motors That Survive - Motors That Survive - Motors That Survive -

Empire Magnetics Inc.

Price Builder

Environment	Extended temperature range (HT)	November 3rd, 2005	
Group	Motor - Stepper	Lot charge	First unit
Motor	Stepper Motor (U17-2)	$ 65.00	$ 1,157.00
Gearbox	- none -	$ 0.00	$ 0.00
Resolver	- none -	$ 0.00	$ 0.00
RTD	- none -	$ 0.00	$ 0.00
Brake	- none -	$ 0.00	$ 0.00
Cable	- none -	$ 0.00	$ 0.00
Shaft	- none -	$ 0.00	$ 0.00
Subtotal		**$ 65.00**	**$ 1,157.00**
Model	**HT-U17-2**		
First Unit Price		**$ 1,222.00**	

Quantity	2 - 4	5 - 9	10 - 24
Price	$ 1,157.00	$ 1,041.30	$ 937.17

Pricing Details

| **Personal Toolbar** | Home | About EMI | Products | Contact EMI | FAQ | Site Map |
| Model Builder | Technical Articles | Technical Drawings |

Empire Magnetics Inc.

Keyways - Frame 17

Drawings

FAQ

Woodruff Keys

Frame	17
Shaft Dia (in)	0.196
Shaft Length (in)	0.94
Woodruff Key #	n/a
CD (in)	n/a
W (in)	n/a
DIA (in)	n/a
H (in)	n/a

Square Keys

Frame	17
Shaft Dia (in)	0.196
Shaft Length (in)	0.94
L (in)	n/a
W (in)	n/a
J (in)	n/a

hat Survive - Motors That Survive - Motors That Survive

Empire Magnetics Inc.

Torque Chart for Stepper Motor U17-1

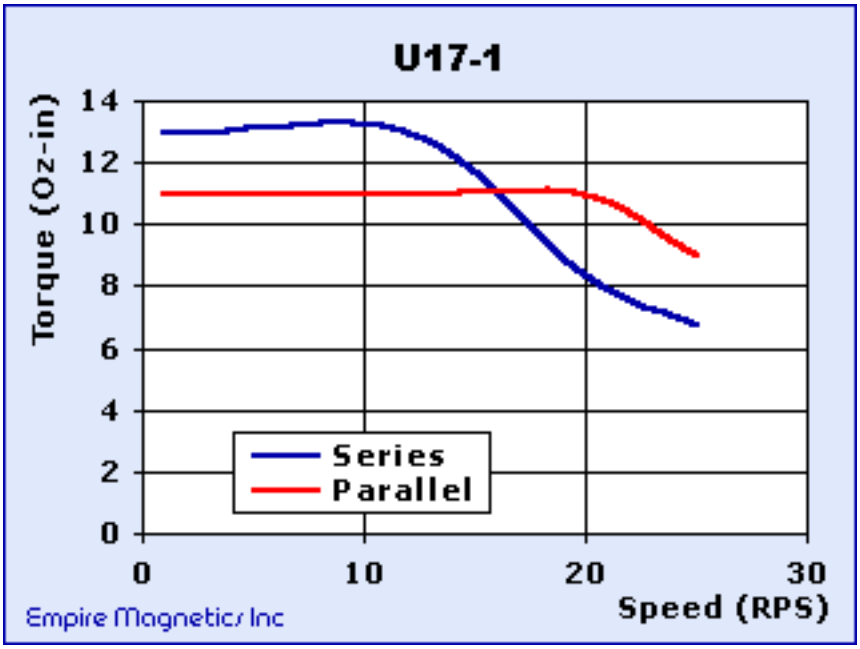

Series connection, bipolar power		Parallel connection, unipolar power	
Speed (RPS)	Torque (oz-in)	Speed (RPS)	Torque (oz-in)
1	13	1	11
12	13	12	11
20	8	20	11
25	7	25	9

Calculated torque speed curves for various voltages here

hat Survive - Motors That Survive - Motors That Survive

Empire Magnetics Inc.

Torque Chart for Stepper Motor U17-2

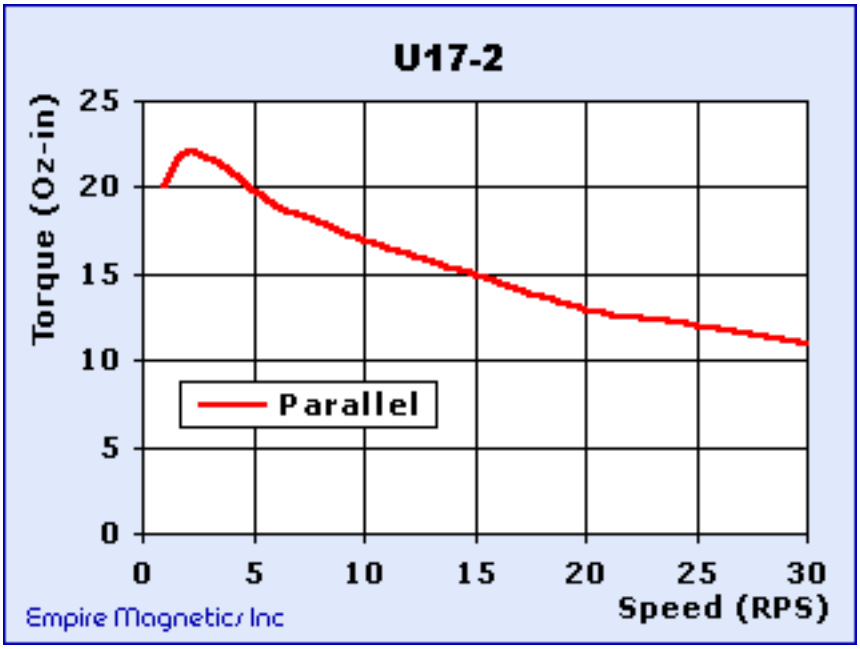

Parallel connection	
Speed (RPS)	Torque (oz-in)
1	20
2	22
4	21
6	19
8	18
10	17
15	15
20	13
25	12
30	11

Parallel connected with 36...48 volt bipolar drive such as the Compumotor LN

Calculated torque speed curves for various voltages here

hat Survive - Motors That Survive - Motors That Survive

Empire Magnetics Inc.

Wiring Diagram for Frame 17 Extended Temperature (-HT) Stepper Motors

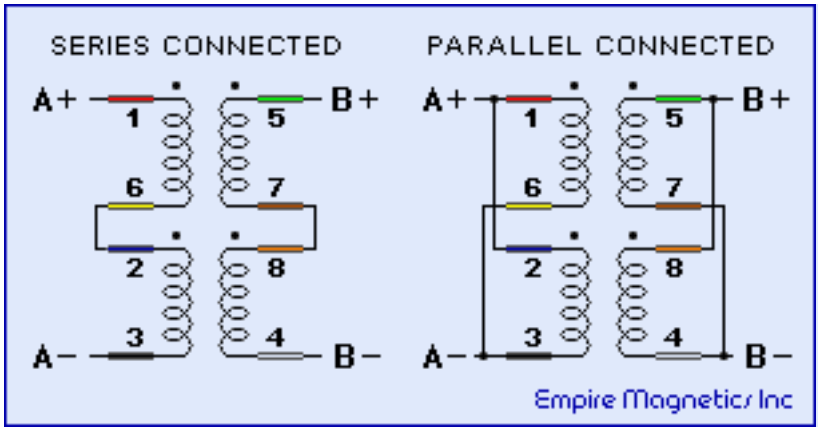

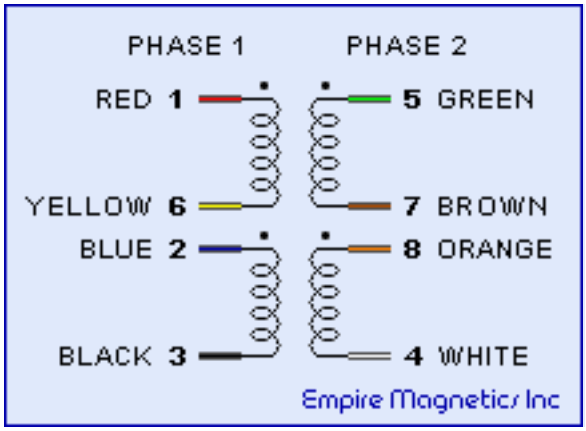

Standard Configuration is 8 Individual Lead Wires
Minimum 12 inches in Length

Motor model	Wire size	Wire diameter (Inches)
U17-1	26	0.0182
U17-2	26	0.0182

Cable information: When optional cables are ordered on U17 motors, it is necessary to specify series or parallel connections. Since there is not enough space inside the size 17 motor to install a cable, optional cable when ordered, is connected on the exterior of the motor with in-line splices.

Empire Magnetics Part number 00-0510-0037 four conductors of 26 AWG, shielded, FEP teflon jacket, nominal cable OD .135 inches, minimum bend radius .7 inches. Stranded silver-coated copper conductors, insulated with extruded TFE Teflon. Color-coded, cabled, silver-plated copper braid shield. White TFE Teflon tape-wrapped jacket mil-w-16878/4, temp rating -65° to 200° C, voltage: 600V (RMS)

| **Personal Toolbar** | Home | About EMI | Products | Contact EMI | FAQ | Site Map |
| Model Builder | Technical Articles | Technical Drawings |

hat Survive - Motors That Survive - Motors That Survive

Empire Magnetics Inc.

Extended Temperature Stepper Motors 23 Family Size - U Series

Options:

- Gearboxes
- Feedback Devices
- Brakes
- Temperature Sensors

Modifications:

- Keyways
- Custom Shafts

Speed/Torque (oz-in) Charts

- U21
- U22
- U23

CAD Drawings

Wiring Information

FAQ

Individual Motor Specifications

Model Number	HT-U21	HT-U22	HT-U23
Drawing Number	list	list	list
Motor	U21	U22	U23
Pricing	HT-U21	HT-U22	HT-U23
NEMA Frame Size	23	23	23
Number of Magnetic Stacks	1	2	3
Step Angle	1.8	1.8	1.8
Accuracy Grade (%)	3	3	3
Detent Torque (oz-in)	6	15	21
Static Torque At Thermal Current {unipolar} (oz-in)	45	80	120
Static Torque At Thermal Current {parallel} (oz-in)	50	85	110
Static Torque At Thermal Current {series} (oz-in)	60	110	130
Thermal Current {unipolar} (A)	1.4	1.6	2.0
Thermal Current {parallel} (A)	1.8	1.8	2.3
Thermal Current {series} (A)	1.4	1.4	1.8

hat Survive - Motors That Survive - Motors That Survive

Single Coil Inductance (mH)	3.5	3.5	3.5
Single Coil Resistance (ohm)	1.4	1.4	1.4
Series Inductance (mH)	14	14	14
Series Resistance (ohm)	3.2	3.2	3.2
Bearing Type	C/F	C/F	C/F
Bearing Thrust Load (lbs)	25	25	25
Bearing Radial Load (lbs)	50	50	50
Bearing End Play (10^{-3} in)	C/F	C/F	C/F
Bearing Radial Play (10^{-3} in)	8	8	8
Rotor Inertia (oz-in^2)	0.48	1.28	1.75
Body Diameter (in)	2.3	2.3	2.3
Body Length (in)	2	3.1	4
Weight (lbs)	1.6	2.4	3.2

- Motors That Survive - Motors That Survive - Motors T

- Motors That Survive - Motors That Survive - Motors That Survive -

Empire Magnetics Inc.

Price Builder

Environment	Extended temperature range (HT)	November 3rd, 2005	
Group	Motor - Stepper	Lot charge	First unit
Motor	Stepper Motor (U21)	$ 65.00	$ 1,183.00
Gearbox	- none -	$ 0.00	$ 0.00
Resolver	- none -	$ 0.00	$ 0.00
RTD	- none -	$ 0.00	$ 0.00
Brake	- none -	$ 0.00	$ 0.00
Cable	- none -	$ 0.00	$ 0.00
Shaft	- none -	$ 0.00	$ 0.00
Subtotal		**$ 65.00**	**$ 1,183.00**
Model	**HT-U21**		
First Unit Price		**$ 1,248.00**	

Quantity	2 - 4	5 - 9	10 - 24
Price	$ 1,183.00	$ 1,064.70	$ 958.23

Pricing Details

- Motors That Survive - Motors That Survive - Motors That Survive -

Empire Magnetics Inc.

Price Builder

Environment	Extended temperature range (HT)	November 3rd, 2005	
Group	Motor - Stepper	Lot charge	First unit
Motor	Stepper Motor (U22)	$ 65.00	$ 1,334.00
Gearbox	- none -	$ 0.00	$ 0.00
Resolver	- none -	$ 0.00	$ 0.00
RTD	- none -	$ 0.00	$ 0.00
Brake	- none -	$ 0.00	$ 0.00
Cable	- none -	$ 0.00	$ 0.00
Shaft	- none -	$ 0.00	$ 0.00
Subtotal		**$ 65.00**	**$ 1,334.00**
Model	**HT-U22**		
First Unit Price		**$ 1,399.00**	

Quantity	2 - 4	5 - 9	10 - 24
Price	$ 1,334.00	$ 1,200.60	$ 1,080.54

Pricing Details

- Motors That Survive - Motors That Survive - Motors That Survive -

Empire Magnetics Inc.

Price Builder

Environment	Extended temperature range (HT)	November 3rd, 2005	
Group	Motor - Stepper	Lot charge	First unit
Motor	Stepper Motor (U23)	$ 65.00	$ 1,534.00
Gearbox	- none -	$ 0.00	$ 0.00
Resolver	- none -	$ 0.00	$ 0.00
RTD	- none -	$ 0.00	$ 0.00
Brake	- none -	$ 0.00	$ 0.00
Cable	- none -	$ 0.00	$ 0.00
Shaft	- none -	$ 0.00	$ 0.00
Subtotal		**$ 65.00**	**$ 1,534.00**
Model	**HT-U23**		
First Unit Price		**$ 1,599.00**	

Quantity	2 - 4	5 - 9	10 - 24
Price	$ 1,534.00	$ 1,380.60	$ 1,242.54

Pricing Details

Empire Magnetics Inc.

Frame 23
Planetary Gearboxes

Empire Magnetics Inc. prepares gearboxes to operate in the same environments as the motors and resolvers. We start with high quality planetary gearboxes. These units are selected to provide maximum torque capacity with the smallest practical volume. We then upgrade the materials construction and lubrication to meet the requirements of the environment.

(text continued below table)

Specifications

Model Number	Drawing Number	Gear Ratio	Backlash (degrees)	Min Eff. (%)	Gearhead Length (in)	Wt. (lbs)	Max Rated Contin. Torque (in-lb)	Momentary Torque (in-lb)	Reflected Inertia (oz-in^2)
23P:3	M2500003	3	0.10	90	2.70	1.75	225	350	0.468
23P:4	M2500003	4	0.10	90	2.70	1.75	250	365	0.398
23P:5.5	M2500003	5.5	0.10	90	2.70	1.75	270	425	0.345
23P:7	M2500003	7	0.10	90	2.70	1.75	280	430	0.317
23P:10	M2500003	10	0.10	90	2.70	1.75	225	350	0.291
23P:16	M2500004	16	0.17	85	3.50	2.75	1050	1665	0.422
23P:22	M2500004	22	0.17	85	3.50	2.75	1215	1915	0.417
23P:28	M2500004	28	0.17	85	3.50	2.75	1500	2350	0.415
23P:40	M2500004	40	0.17	85	3.50	2.75	1340	2070	0.568
23P:49	M2500004	49	0.17	85	3.50	2.75	1000	1550	0.320
23P:55	M2500004	55	10	85	3.50	2.75	1150	1800	0.293
23P:70	M2500004	70	0.17	85	3.50	2.75	1040	1600	0.292
23P:100	M2500004	100	0.17	85	3.50	2.75	700	1080	0.292

hat Survive - Motors That Survive - Motors That Survive

Gearboxes for stepper motors and brushless motors are designed for the accurate positional functions desired of such systems.
All of the planetary gearheads provide "in line" power transfer so there is no offset from the motor shaft to the output shaft of the gearhead.
Vacuum rated gearboxes have all the materials selected or replaced with items that are compatible with VC, VS, or VX grades. The VS and VX grades are cleaned in the same exacting fashion as other components of this vacuum level.
For VX grade we offer dry film lubrications as an option, while the vapor pressure is lower on dry film lubrications, the wear life is also lower. The application specifics must be considered to make the decision.
Planetary gearboxes are available for stepper motors from size 17 to size 65, adapted versions of these same gearboxes can be mounted to brushless servo motors as well.

Other gearbox types:

For specific applications custom units using spur gears can be provided. Typically these are useful on very small motors such as the size 11.
In other applications where weight or space is highly constrained, we can offer harmonic style gearboxes. These gearboxes offer high ratios (but not low ones) in a compact lightweight design. They offer low backlash, but they are not as stiff as the other gearboxes. They do offer smooth motions for tool path applications.

Add Page to Fax List - 1008

Send Complete Fax List

- Motors That Survive - Motors That Survive - Motors T

Empire Magnetics Inc.

Feedback Devices - Resolvers

Resolvers

Options

-RDE

Features

- **Long cable runs supported, up to 500 ft.**
- **Rugged construction, protected mounting**
- **Good electrical noise immunity--twisted shielded pair cabling**
- **Compatible--connects easily to -RDE resolver-to encoder converter**

Feedback Devices Resolvers

Industrial working environments can be

Resolver Specifications

Model Option	-R
Model Description	Factory Mounted Resolver
Available Environment Options	All
Drawing Number	C/F
Compatible Motor	U-series, P-series
Transformation Ratio	.954
Input Voltage (VRMS @ 5kHz)	6.5
Output Voltage (VRMS)	6.2 ± 5%
Impedance ZSO	1064 + j1647
Impedance ZRO	450 + j586
Rotor DC Resistance (Ohms)	83
Stator DC Resistance (Ohms)	143
Maximum Accuracy	± 7 arcmin

Phasing Equation	
$E(S_{1-3}) = K[E(R_{1-2})\cos \alpha]$	$E(S_{2-4}) = K[E(R_{1-2})\sin \alpha]$

hard on position feedback transducers. Incremental rotary encoders are simple and cost effective in many motion control applications. However, encoders fail under extreme conditions such as high temperature, vacuum, radiation, or shock and vibration.

Brushless Resolvers Survive

Empire Magnetics makes resolver technology easy to apply with rugged motor-mounted resolvers and an easy to use resolver-to-encoder conversion module. Brushless resolvers and available with all Empire Magnetics motor products, providing shaft position information under harsh conditions.

Empire Magnetics mount optional size 11 resolvers on the back end of most Empire motor products, including gearmotors, and motors rated for submersion, vacuum, or radiation. Resolvers on environmental

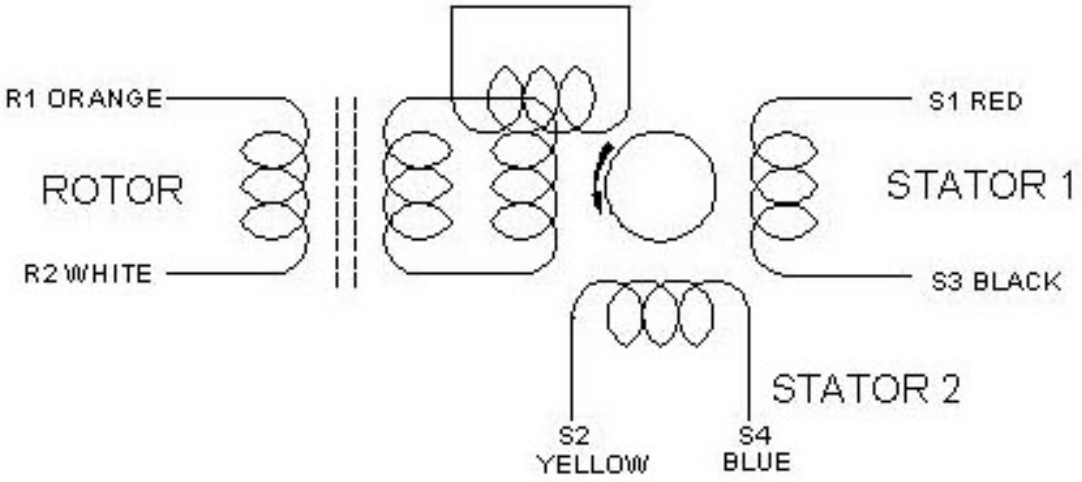

Cabled Resolver Assignments (pairs)		
R1: Green	S1: Red	S2: White
R2: Black	S3: Black	S4: Black

Motors That Survive - Motors That Survive

motors carry the same
rating as the motors.

ors That Survive - Motors That Survive - Motors That Surv

Empire Magnetics Inc.

Frame 23 Brakes

Brakes

CAD Drawings

FAQ

Individual Specifications

Model Number	B11	B12	B13
Drawing Number	M2400019	M2400019	M2400019
Model Description	Electrically Released Brakes	Electrically Released Brakes	Electrically Released Brakes
Available Environment Options	C/F	C/F	C/F
Compatible Motor Frame Size	23	23	23
Holding Torque (oz-in)	288	288	288
Voltage	24 VDC	90 VDC	110 VAC
Power (W)	17.6	16.0	16.0
Current (A)	0.733	0.178	0.178

hat Survive - Motors That Survive - Motors That Survive

- Motors That Survive - Motors That Survive - Motors T

Empire Magnetics Inc.

Torque Chart for Stepper Motor U21

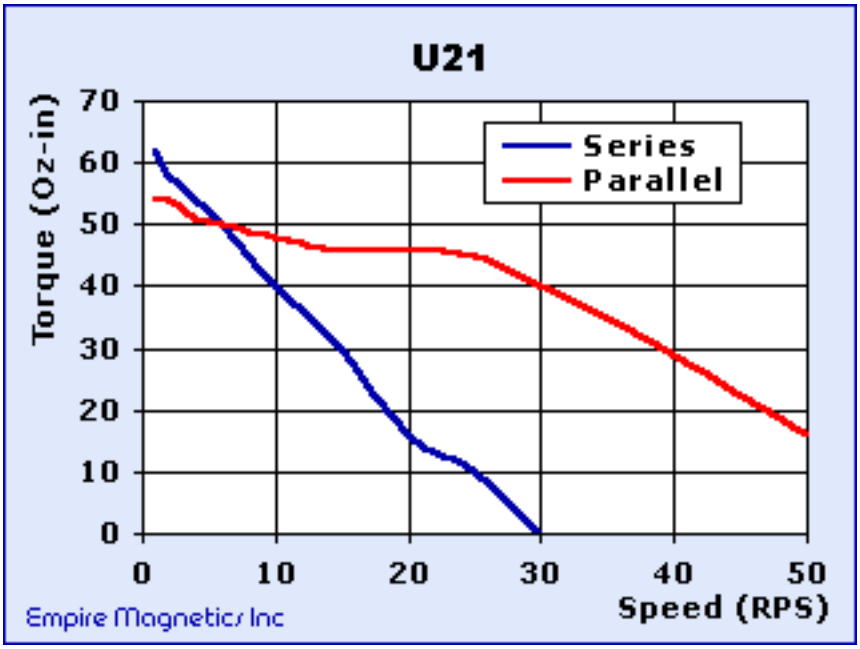

Series connected with 150 volt bipolar drive such as the Compumotor S/SX		Parallel connected with 150 volt bipolar drive such as the Compumotor S/SX	
Speed (RPS)	Torque (oz-in)	Speed (RPS)	Torque (oz-in)
1	62	1	54
2	58	2	54
4	54	4	51
6	50	6	50
8	45	8	49
10	40	10	48
15	30	15	46
20	16	20	46
25	10	25	45
30	N/A	30	40
35	N/A	35	35
40	N/A	40	29
50	N/A	50	16

Calculated torque speed curves for various voltages here

hat Survive - Motors That Survive - Motors That Survive

Empire Magnetics Inc.

Torque Chart for Stepper Motor U22

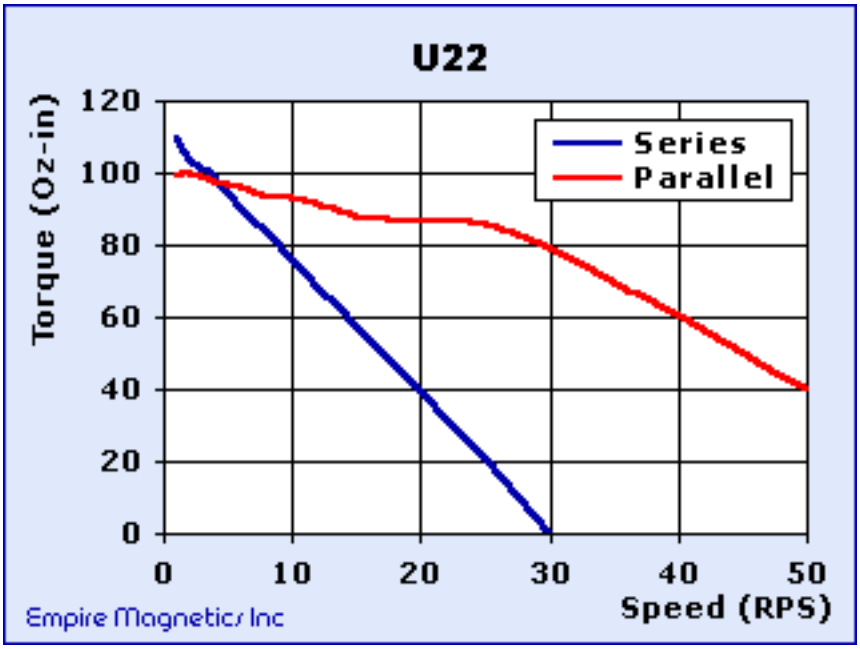

Series connected with 150 volt bipolar drive such as the Compumotor S/SX		Parallel connected with 150 volt bipolar drive such as the Compumotor S/SX	
Speed (RPS)	Torque (oz-in)	Speed (RPS)	Torque (oz-in)
1	110	1	99
2	104	2	100
4	99	4	98
6	90	6	96
8	84	8	93
10	76	10	93
15	58	15	88
20	40	20	87
25	21	25	86
30	N/A	30	79
35	N/A	35	70
40	N/A	40	61
50	N/A	50	40

Calculated torque speed curves for various voltages here

hat Survive - Motors That Survive - Motors That Survive

Empire Magnetics Inc.

Torque Chart for Stepper Motor U23

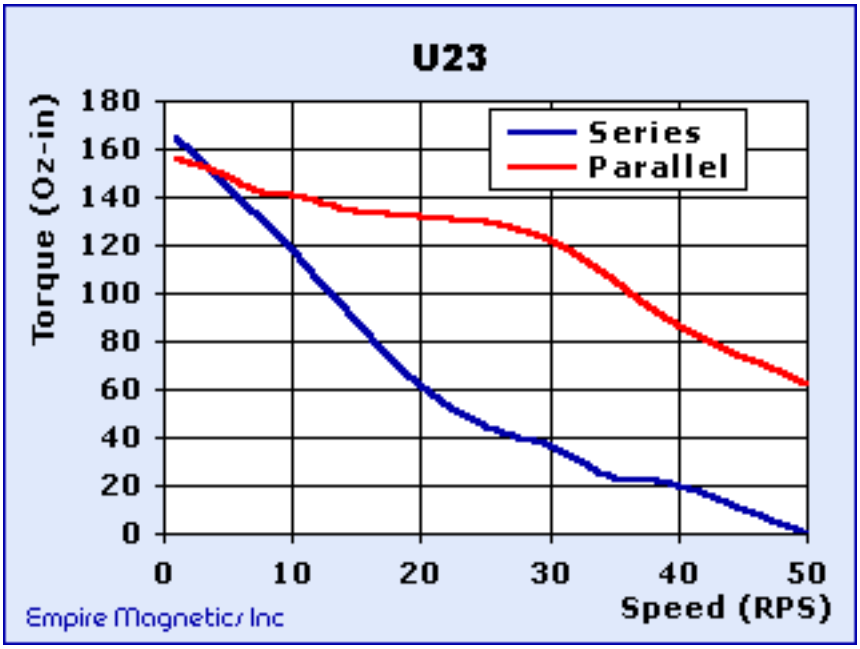

Series connected with 150 volt bipolar drive such as the Compumotor S/SX		Parallel connected with 150 volt bipolar drive such as the Compumotor S/SX	
Speed (RPS)	Torque (oz-in)	Speed (RPS)	Torque (oz-in)
1	165	1	156
2	160	2	155
4	150	4	151
6	139	6	146
8	129	8	141
10	119	10	141
15	89	15	135
20	62	20	132
25	45	25	130
30	37	30	122
35	23	35	106
40	20	40	87
50	n/a	50	62

Calculated torque speed curves for various voltages here

hat Survive - Motors That Survive - Motors That Survive

Empire Magnetics Inc.

Wiring Diagram for
Frame 23 Extended Temperature (-HT) Stepper Motors

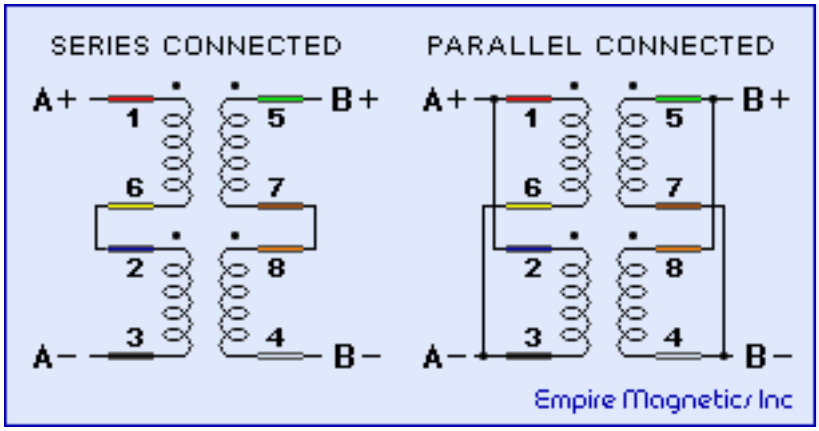

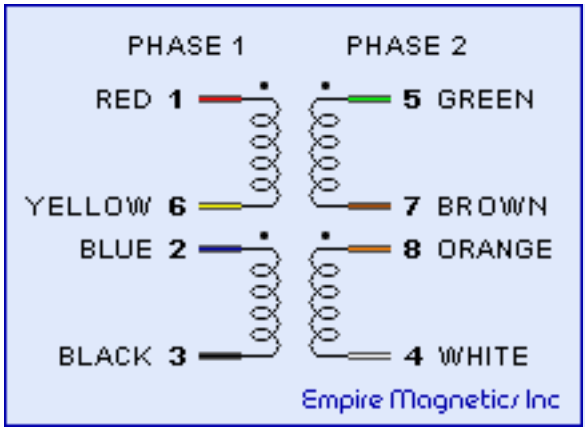

Standard Configuration is 8 Individual Lead Wires
Minimum 12 inches in Length

Motor model	Wire size	Wire diameter (Inches)
U21	22	0.0281
U22	22	0.0281
U23	22	0.0281

Cable information: When optional cables are ordered it is necessary to specify series or parallel configuration as 8 wire cable is too large for some motors. As such 4 wire cable is typically supplied.

Empire Magnetics Part number 00-0510-0001 four conductors of 22 AWG, with overall shield and jacket, nominal cable OD .163 inches, minimum bend radius .815 inches. Stranded silver-coated copper conductors, insulated with extruded TFE Teflon. Color-coded, cabled, silver-plated copper braid shield. White TFE Teflon tape-wrapped jacket mil-w-16878/4, temp rating -65° to 200° C, voltage: 600V (RMS)

| **Personal Toolbar** | Home | About EMI | Products | Contact EMI | FAQ | Site Map |
| Model Builder | Technical Articles | Technical Drawings |

hat Survive - Motors That Survive - Motors That Survive

Empire Magnetics Inc.

Extended Temperature Stepper Motors 34 Family Size - U Series

Options:

- Gearboxes
- Feedback Devices
- Brakes
- Temperature Sensors

Modifications:

- Keyways
- Custom Shafts

Speed/Torque (oz-in) Charts

- U31
- U32
- U33

CAD Drawings

Wiring Information

FAQ

Individual Motor Specifications

Model Number	HT-U31	HT-U32	HT-U33
Drawing Number	list	list	list
Motor	U31	U32	U33
NEMA Frame Size	34	34	34
Pricing	HT-U31	HT-U32	HT-U33
Number of Magnetic Stacks	1	2	3
Step Angle	1.8	1.8	1.8
Accuracy Grade (%)	3	3	3
Detent Torque (oz-in)	12	26	31
Static Torque At Thermal Current {unipolar} (oz-in)	100	230	370
Static Torque At Thermal Current {parallel} (oz-in)	120	265	400
Static Torque At Thermal Current {series} (oz-in)	155	320	450
Thermal Current {unipolar} (A)	2.3	3.6	5.0
Thermal Current {parallel} (A)	3.4	4.5	6.3
Thermal Current {series} (A)	1.9	2.7	3.4

hat Survive - Motors That Survive - Motors That Survive

Single Coil Inductance (mH)	3.5	3.5	3.5
Single Coil Resistance (ohm)	0.6	0.6	0.6
Series Inductance (mH)	14	14	14
Series Resistance (ohm)	1.5	1.3	1.1
Bearing Type	C/F	C/F	C/F
Bearing Thrust Load (lbs)	25	25	25
Bearing Radial Load (lbs)	100	100	100
Bearing End Play (10^{-3} in)	C/F	C/F	C/F
Bearing Radial Play (10^{-3} in)	8	8	8
Rotor Inertia (oz-in^2)	3.5	6.7	10.3
Body Diameter (in)	3.4	3.4	3.4
Body Length (in)	2.5	3.7	5.2
Weight (lbs)	3.8	5.2	8.3

- Motors That Survive - Motors That Survive - Motors T

Empire Magnetics Inc.

Frame 34
Planetary Gearboxes

Empire Magnetics Inc. prepares gearboxes to operate in the same environments as the motors and resolvers. We start with high quality planetary gearboxes. These units are selected to provide maximum torque capacity with the smallest practical volume. We then upgrade the materials construction and lubrication to meet the requirements of the environment.

(text continued below table)

Specifications

Model Number	Drawing Number	Gear Ratio	Backlash (degrees)	Min Eff. (%)	Gearhead Length (in)	Wt. (lbs)	Max. Rated Cont. Torque (in-lb)	Momentary Torque (in-lb)	Reflected Inertia (oz-in^2)
34P:3	M2500005	3	0.10	90	4.50	7	525	800	2.91
34P:4	M2500005	4	0.10	90	4.50	7	575	850	2.27
34P:5.5	M2500005	5.5	0.10	90	4.50	7	625	975	1.81
34P:7	M2500005	7	0.10	90	4.50	7	650	1000	1.61
34P:10	M2500005	10	0.10	90	4.50	7	525	800	1.42
34P:16	M2500006	16	0.17	85	5.40	8	2450	3850	2.11
34P:22	M2500006	22	0.17	85	5.40	8	2850	4470	2.08
34P:28	M2500006	28	0.17	85	5.40	8	3400	5325	2.06
34P:40	M2500006	40	0.17	85	5.40	8	3100	4800	1.39
34P:49	M2500006	49	0.17	85	5.40	8	2300	3600	1.53
34P:55	M2500006	55	0.17	85	5.40	8	2675	4175	1.39
34P:70	M2500006	70	0.17	85	5.40	8	2400	3700	1.38
34P:100	M2500006	100	0.17	85	5.40	8	1600	2500	1.38

hat Survive - Motors That Survive - Motors That Survive

Gearboxes for stepper motors and brushless motors are designed for the accurate positional functions desired of such systems.
All of the planetary gearheads provide "in line" power transfer so there is no offset from the motor shaft to the output shaft of the gearhead.
Vacuum rated gearboxes have all the materials selected or replaced with items that are compatible with VC, VS, or VX grades. The VS and VX grades are cleaned in the same exacting fashion as other components of this vacuum level.
For VX grade we offer dry film lubrications as an option, while the vapor pressure is lower on dry film lubrications, the wear life is also lower. The application specifics must be considered to make the decision.
Planetary gearboxes are available for stepper motors from size 17 to size 65, adapted versions of these same gearboxes can be mounted to brushless servo motors as well.

Other gearbox types:

For specific applications custom units using spur gears can be provided. Typically these are useful on very small motors such as the size 11.
In other applications where weight or space is highly constrained, we can offer harmonic style gearboxes. These gearboxes offer high ratios (but not low ones) in a compact lightweight design. They offer low backlash, but they are not as stiff as the other gearboxes. They do offer smooth motions for tool path applications.

Add Page to Fax List - 1013

Send Complete Fax List

- Motors That Survive - Motors That Survive - Motors That Survive - Motors T

Empire Magnetics Inc.

Frame 34 Brakes

Brakes

CAD Drawings

FAQ

Individual Specifications

Model Number	B21	B22	B23
Drawing Number	M2400022	M2400022	M2400022
Model Description	Electrically Released Brakes	Electrically Released Brakes	Electrically Released Brakes
Available Environment Options	C/F	C/F	C/F
Compatible Motor Frame Size	34	34	34
Holding Torque (oz-in)	1344	1344	1344
Voltage	24 VDC	90 VDC	110 VAC
Power (W)	23.3	21.5	21.5
Current (A)	0.973	0.239	0.239

hat Survive - Motors That Survive - Motors That Survive

- Motors That Survive - Motors That Survive - Motors T

- Motors That Survive - Motors That Survive - Motors That Survive -

Empire Magnetics Inc.

Price Builder

Environment	Extended temperature range (HT)	November 3rd, 2005	
Group	Motor - Stepper	Lot charge	First unit
Motor	Stepper Motor (U31)	$ 45.00	$ 1,609.00
Gearbox	- none -	$ 0.00	$ 0.00
Resolver	- none -	$ 0.00	$ 0.00
RTD	- none -	$ 0.00	$ 0.00
Brake	- none -	$ 0.00	$ 0.00
Cable	- none -	$ 0.00	$ 0.00
Shaft	- none -	$ 0.00	$ 0.00
Subtotal		**$ 45.00**	**$ 1,609.00**
Model	**HT-U31**		
First Unit Price		**$ 1,654.00**	

Quantity	2 - 4	5 - 9	10 - 24
Price	$ 1,609.00	$ 1,448.10	$ 1,303.29

Pricing Details

Empire Magnetics Inc.

Price Builder

Environment	Extended temperature range (HT)	November 3rd, 2005	
Group	Motor - Stepper	Lot charge	First unit
Motor	Stepper Motor (U32)	$ 45.00	$ 1,962.00
Gearbox	- none -	$ 0.00	$ 0.00
Resolver	- none -	$ 0.00	$ 0.00
RTD	- none -	$ 0.00	$ 0.00
Brake	- none -	$ 0.00	$ 0.00
Cable	- none -	$ 0.00	$ 0.00
Shaft	- none -	$ 0.00	$ 0.00
Subtotal		**$ 45.00**	**$ 1,962.00**
Model	**HT-U32**		
First Unit Price		**$ 2,007.00**	

Quantity	2 - 4	5 - 9	10 - 24
Price	$ 1,962.00	$ 1,765.80	$ 1,589.22

Pricing Details

- Motors That Survive - Motors That Survive - Motors That Survive -

Empire Magnetics Inc.

Price Builder

Environment	Extended temperature range (HT)	November 3rd, 2005	
Group	Motor - Stepper	Lot charge	First unit
Motor	Stepper Motor (U33)	$ 45.00	$ 2,160.00
Gearbox	- none -	$ 0.00	$ 0.00
Resolver	- none -	$ 0.00	$ 0.00
RTD	- none -	$ 0.00	$ 0.00
Brake	- none -	$ 0.00	$ 0.00
Cable	- none -	$ 0.00	$ 0.00
Shaft	- none -	$ 0.00	$ 0.00
Subtotal		**$ 45.00**	**$ 2,160.00**
Model	**HT-U33**		
First Unit Price		**$ 2,205.00**	

Quantity	2 - 4	5 - 9	10 - 24
Price	$ 2,160.00	$ 1,944.00	$ 1,749.60

Pricing Details

- Motors That Survive - Motors That Survive - Motors That Survive -

Empire Magnetics Inc.

Torque Chart for Stepper Motor U31

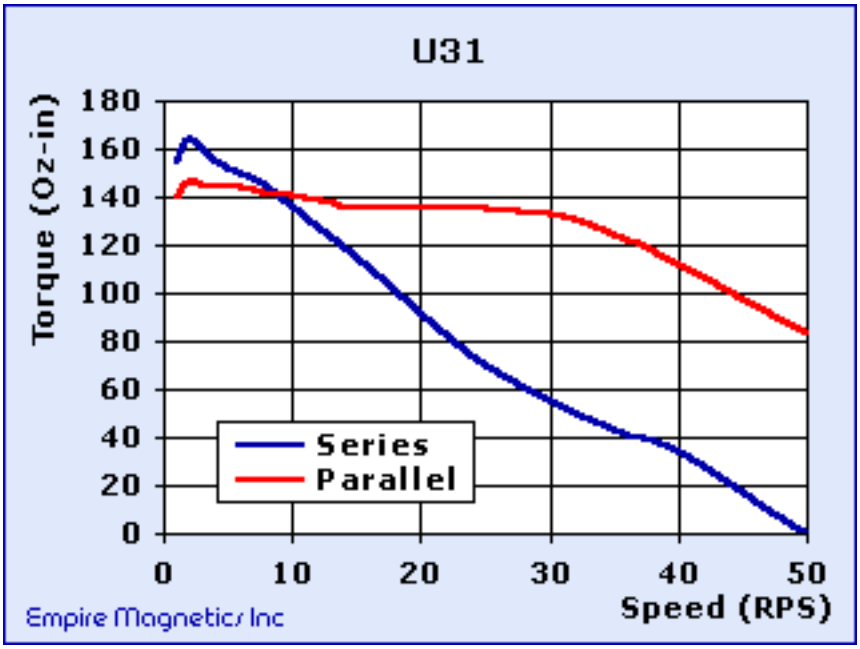

Series connected with 150 volt bipolar drive such as the Compumotor S/SX		Parallel connected with 150 volt bipolar drive such as the Compumotor S/SX	
Speed (RPS)	Torque (oz-in)	Speed (RPS)	Torque (oz-in)
1	154	1	140
2	164	2	147
4	156	4	145
6	150	6	144
8	145	8	141
10	137	10	141
15	116	15	136
20	92	20	136
25	70	25	136
30	56	30	133
35	43	35	125
40	34	40	112
50	n/a	50	83

Calculated torque speed curves for various voltages here

hat Survive - Motors That Survive - Motors That Survive

Empire Magnetics Inc.

Torque Chart for Stepper Motor U32

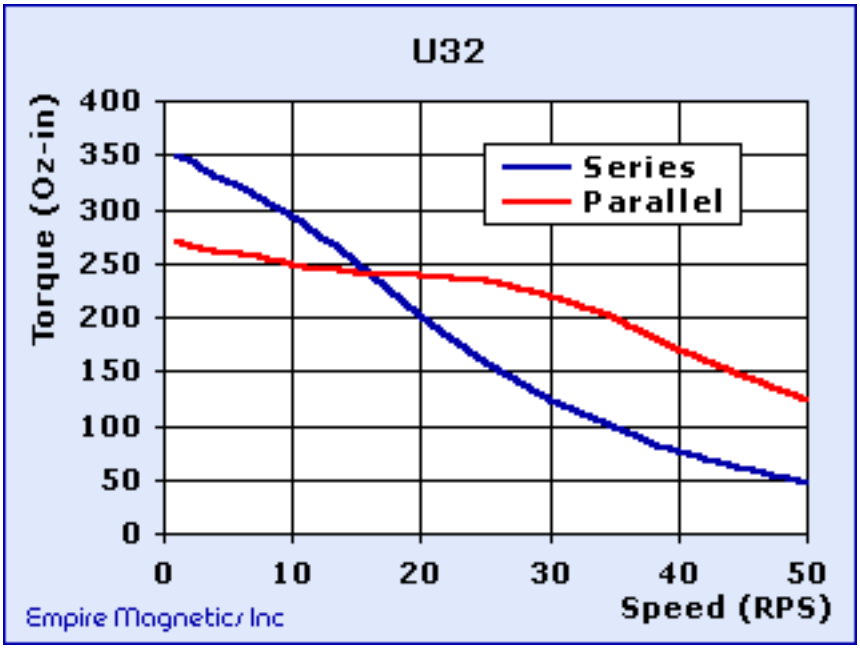

Series connected with 150 volt bipolar drive such as the Compumotor S/SX		Parallel connected with 150 volt bipolar drive such as the Compumotor S/SX	
Speed (RPS)	Torque (oz-in)	Speed (RPS)	Torque (oz-in)
1	349	1	269
2	345	2	266
4	331	4	261
6	320	6	259
8	307	8	255
10	293	10	249
15	251	15	243
20	202	20	240
25	158	25	234
30	123	30	220
35	98	35	199
40	77	40	171
50	48	50	123

Calculated torque speed curves for various voltages here

hat Survive - Motors That Survive - Motors That Survive

Empire Magnetics Inc.

Torque Chart for Stepper Motor U33

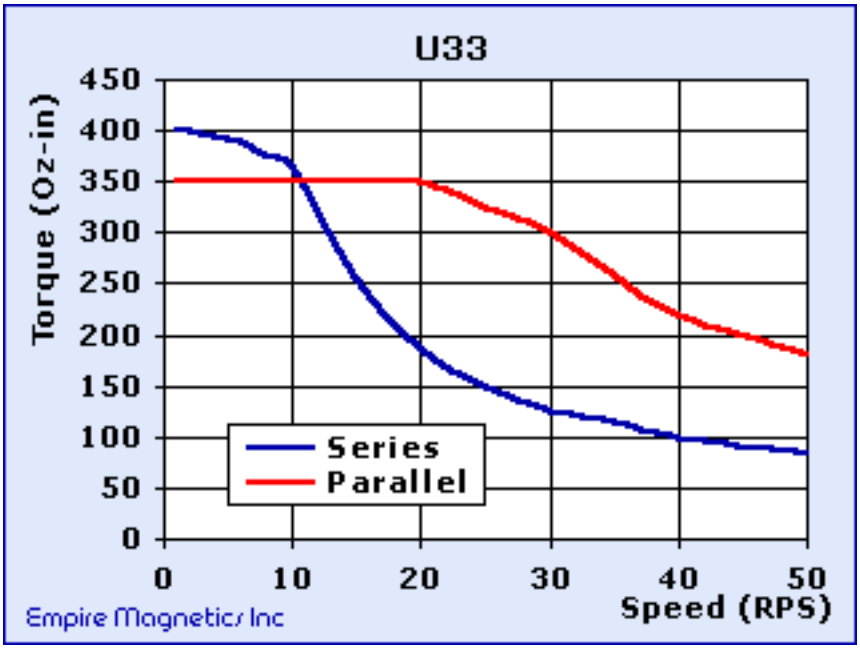

Series connected with 150 volt bipolar drive such as the Compumotor S/SX		Parallel connected with 150 volt bipolar drive such as the Compumotor S/SX	
Speed (RPS)	Torque (oz-in)	Speed (RPS)	Torque (oz-in)
1	400	1	350
2	400	2	350
4	395	4	350
6	390	6	350
8	375	8	350
10	366	10	350
15	257	15	350
20	188	20	350
25	150	25	325
30	125	30	300
35	115	35	260
40	100	40	220
50	85	50	180

Calculated torque speed curves for various voltages here

hat Survive - Motors That Survive - Motors That Survive

Empire Magnetics Inc.

Wiring Diagram for
Frame 34 Extended Temperature (-HT) Stepper Motors

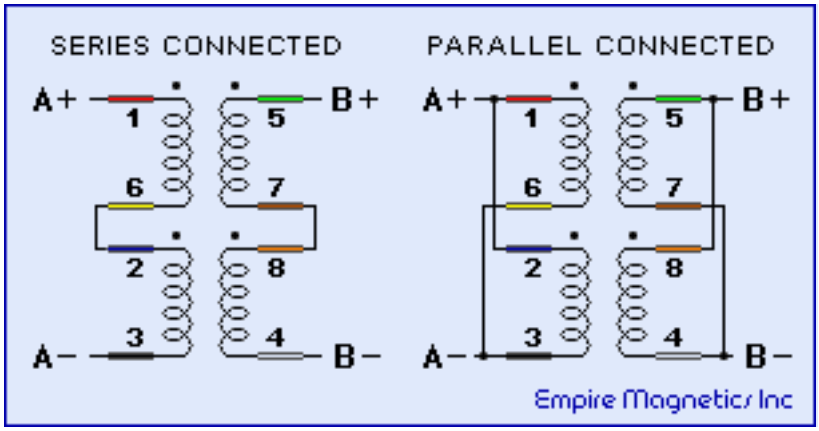

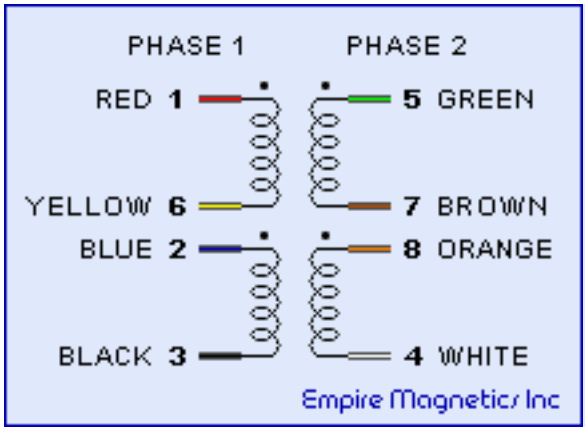

Standard Configuration is 8 Individual Lead Wires
Minimum 12 inches in Length

Motor model	Wire size	Wire diameter (Inches)
U31	18	0.0437
U32	18	0.0437
U33	18	0.0437

Cable information: When optional cables are ordered it is necessary to specify series or parallel configuration as 8 wire cable is too large for some motors. As such 4 wire cable is typically supplied.

Empire Magnetics Part number 00-0510-0002 four conductors of 18 AWG, with overall shield and jacket, nominal cable OD .209 inches, minimum bend radius 1.045 inches. Stranded silver-coated copper conductors, insulated with extruded TFE Teflon. Color-coded, cabled, silver-plated copper braid shield. White TFE Teflon tape-wrapped jacket mil-w-16878/4, temp rating -65° to 200° C, voltage: 600V (RMS)

| **Personal Toolbar** | Home | About EMI | Products | Contact EMI | FAQ | Site Map |
| Model Builder | Technical Articles | Technical Drawings |

hat Survive - Motors That Survive - Motors That Survive

Empire Magnetics Inc.

Extended Temperature Stepper Motors 42 Family Size - U Series

Options:

- Gearboxes
- Feedback Devices
- Brakes
- Temperature Sensors

Modifications:

- Keyways
- Custom Shafts

Speed/Torque (oz-in) Charts

- U41
- U42
- U43

CAD Drawings

Wiring Information

FAQ

Individual Motor Specifications

Model Number	HT-U41	HT-U42	HT-U43
Drawing Number	list	list	list
Motor	U41	U42	U43
NEMA Frame Size	42	42	42
Pricing	HT-U41	HT-U42	HT-U43
Number of Magnetic Stacks	1	2	3
Step Angle	1.8	1.8	1.8
Accuracy Grade (%)	3	3	3
Detent Torque (oz-in)	16	25	38
Static Torque At Thermal Current {unipolar} (oz-in)	375	375	730
Static Torque At Thermal Current {parallel} (oz-in)	400	800	1150
Static Torque At Thermal Current {series} (oz-in)	525	1000	1480
Thermal Current {unipolar} (A)	5.0	6.3	8.1
Thermal Current {parallel} (A)	5.4	7.2	9.0
Thermal Current {series} (A)	4.5	5.4	7.2

Single Coil Inductance (mH)	3.5	3.5	3.5
Single Coil Resistance (ohm)	0.3	0.3	0.2
Series Inductance (mH)	14	14	14
Series Resistance (ohm)	0.8	0.6	0.6
Bearing Type	C/F	C/F	C/F
Bearing Thrust Load (lbs)	50	50	50
Bearing Radial Load (lbs)	300	300	300
Bearing End Play (10^{-3} in)	C/F	C/F	C/F
Bearing Radial Play (10^{-3} in)	8	8	8
Rotor Inertia (oz-in^2)	22	44	66
Body Diameter (in)	4.2	4.2	4.2
Body Length (in)	5.5	7.5	9.8
Weight (lbs)	12	19	25

- Motors That Survive - Motors That Survive - Motors T

hat Survive - Motors That Survive - Motors That Survive

Empire Magnetics Inc.

Frame 42
Planetary & Cycloidal Gearboxes

Empire Magnetics Inc. prepares gearboxes to operate in the same environments as the motors and resolvers. We start with high quality planetary gearboxes. These units are selected to provide maximum torque capacity with the smallest practical volume. We then upgrade the materials construction and lubrication to meet the requirements of the environment.

(text continued below table)

Specifications

Model Number	Drawing Number	Gear Ratio	Backlash (degrees)	Min Eff (%)	Gearhead Length (in)	Weight (lbs)	Max Rated Continuous Torque (in-lb)	Momentary Torque (in-lb)	Reflected Inertia (oz-in^2)
42P:3	M2500007	3	0.10	90	4.80	11.5	850	1300	6.02
42P:4	M2500007	4	0.10	90	4.80	11.5	930	1375	3.80
42P:5.5	M2500007	5.5	0.10	90	4.80	11.5	1010	1575	2.31
42P:7	M2500007	7	0.10	90	4.80	11.5	1050	1615	1.64
42P:10	M2500007	10	0.10	90	4.80	11.5	850	1300	1.08
42P:16	M2500008	16	0.17	85	6.40	18	3950	6210	3.83
42P:22	M2500008	22	0.17	85	6.40	18	4300	6450	3.71
42P:28	M2500008	28	0.17	85	6.40	18	5500	8200	3.66
42P:40	M2500008	40	0.17	85	6.40	18	5000	7750	1.08
42P:49	M2500008	49	0.17	85	6.40	18	3710	5810	1.59
42P:55	M2500008	55	0.17	85	6.40	18	4320	6740	1.06
42P:70	M2500008	70	0.17	85	6.40	18	3875	5975	1.05
42P:100	M2500008	100	0.17	85	6.40	18	2575	4035	1.05

Gearboxes for stepper motors and brushless motors are designed for the accurate positional functions desired of such systems.
All of the planetary gearheads provide "in line" power transfer so there is no offset from the motor shaft to the output shaft of the gearhead.
Vacuum rated gearboxes have all the materials selected or replaced with items that are compatible with VC, VS, or VX grades. The VS and VX grades are cleaned in the same exacting fashion as other components of this vacuum level.
For VX grade we offer dry film lubrications as an option, while the vapor pressure is lower on dry film lubrications, the wear life is also lower. The application specifics must be considered to make the decision.
Planetary gearboxes are available for stepper motors from size 17 to size 65, adapted versions of these same gearboxes can be mounted to brushless servo motors as well.

Cycloidal gearboxes

The epicycloidal gearboxes are offered with the larger motors as they provide some unique features.
The Cycloidal gearboxes are typically 93% efficient at working speeds; thus makes them ideal for power transfer applications. These gearboxes are able to provide family of gear ratios and very high ratios in a compact fixed size. These gearboxes have momentary peak torque capacity five times the continuous ratings. While the power transfer capacity of the gearbox is excellent, and the rugged construction of the units will survive much abuse, the epicycloidal motions will introduce sinusoidal velocity ripple into the system. As such, these gearboxes are excellent choices for step and repeat, or point A and B type functions. They are not good choices when the travel path, or travel velocity between the points is critical.
In addition to the standard mechanical features of the cycloidal gearbox, the package configuration allows the addition of a zero backlash feedback device. For more details refer to the drawings, however in brief, the feedback device is connected directly to the output shaft of the gearbox. Neither the gear ratio nor the backlash of the gears will affect the reading as there is a solid shaft driving the feedback device.

Due to the size, Cycloidal gearboxes are offered only with size 42 and larger motors.

(text continued below table)

That Survive - Motors That Survive - Motors That Survive

Cycloidal Gearboxes
Specifications

Model Number	C:6	C:11	C:17	C:29
Drawing Number	M2400038	M2400038	M2400038	M2400038
Gear Ratio	6	11	17	29
Compatible Motors	U41, U42, U43	U41, U42, U43	U41, U42, U43	U41, U42, U43
Backlash (degrees)	0.8-1.1	0.8-1.1	0.5-0.65	0.5-0.65
Repeatability (degrees)	0.01	0.01	0.01	0.01
Minimum Efficiency (%)	90	90	90	90
Maximum Radial Load (lbs)	1100	1100	1100	1100
Maximum Axial Load (lbs)	660	660	660	660
Shaft Runout (in)	0.001	0.001	0.001	0.001
Radial Play (in)	0.001	0.001	0.001	0.001
End Play (in)	0.0002	0.0002	0.0002	0.0002
Flange Width (in)	6.3	6.3	6.3	6.3
Gearhead Length (in)	5.0	5.0	5.0	5.0
Weight (lbs)	34.1	34.1	34.1	34.1
Maximum Rated Continuous Torque (in-lb)	601	1104	1500	1620
Maximum Input RPM	3000	3000	3000	3000

Add Page to Fax List - 1018

Send Complete Fax List

Empire Magnetics Inc.

RDE

RDE

Most closed-loop motors controllers require the incremental quadrature feedback that encoders provide. Empire Magnetics' RDE resolver-to-digital converter module closes the loop betwen rugged feedback resolvers and motor controllers that require encoder feedback.

RDE converters connect easily to Empire Magnetics resolvers, providing complementary TTL compatible two phase quadrature and outputs with index (Channels A, B, and Z).

For a more detailed look at the specifications, consult the RDE Manual.

Features

- **Ratiometric conversion technique--provides good electrical noise immunity, accomodates long cables**
- **1,024 cycles per revolution--yields encoder counts**
- **Built-in power supply**
- **Optically isolated encoder interface**
- **Open collector of line**

RDE Specifications

Model Number	RDE	RDE-B	RDE-L
Option	Standard	Binary position data outputs	RS-422 line driver outputs
Drawing Number	C/F	C/F	C/F
Voltage	105-125 VAC, 50-60 Hz	105-125 VAC, 50-60 Hz	105-125 VAC, 50-60 Hz
Current (A)	0.25	0.25	0.25
Encoder Interface	+5 VDC @ 50 mA max.	+5 VDC @ 50 mA max.	+5 VDC @ 50 mA max.
Open Collector Current (mA)	-25	-25	-25
Resolution (cycles per revolution)	1024	1024	1024
Accuracy (+/- degrees)	0.3	0.3	0.3
Operating Temperature Range (degrees C)	0 to 60	0 to 60	0 to 60

driver outputs

Storage Temperature Range (degrees C)	-55 to 150	-55 to 150	-55 to 150

Encoder Connector
(DB25S pinout)

1.	Channel A+
2.	Channel A-
3.	Channel B+
4.	Channel B-
5.	Channel Z+
6.	Channel Z-
8.	Shield
14.-19.	GND
24.	+5VDC

RDE Manual

Empire Magnetics Inc.

Frame 42 Brakes

Brakes

CAD Drawings

FAQ

Individual Specifications

Model Number	B31	B32	B33
Drawing Number	M2400039	M2400039	M2400039
Model Description	Electrically Released Brakes	Electrically Released Brakes	Electrically Released Brakes
Available Environment Options	C/F	C/F	C/F
Compatible Motor Frame Size	42	42	42
Holding Torque (oz-in)	2880	2880	2880
Voltage	24 VDC	90 VDC	110 VAC
Power (W)	27.3	25.8	25.8
Current (A)	1.136	0.287	0.287

hat Survive - Motors That Survive - Motors That Survive

- Motors That Survive - Motors That Survive - Motors T

- Motors That Survive - Motors That Survive - Motors That Survive -

Empire Magnetics Inc.

Price Builder

Environment	Extended temperature range (HT)	November 3rd, 2005	
Group	Motor - Stepper	Lot charge	First unit
Motor	Stepper Motor (U41)	$ 45.00	$ 1,935.00
Gearbox	- none -	$ 0.00	$ 0.00
Resolver	- none -	$ 0.00	$ 0.00
RTD	- none -	$ 0.00	$ 0.00
Brake	- none -	$ 0.00	$ 0.00
Cable	- none -	$ 0.00	$ 0.00
Shaft	- none -	$ 0.00	$ 0.00
Subtotal		**$ 45.00**	**$ 1,935.00**
Model	**HT-U41**		
First Unit Price		**$ 1,980.00**	

Quantity	2 - 4	5 - 9	10 - 24
Price	$ 1,935.00	$ 1,741.50	$ 1,567.35

Pricing Details

- Motors That Survive - Motors That Survive - Motors That Survive -

Empire Magnetics Inc.

Price Builder

Environment	Extended temperature range (HT)	November 3rd, 2005	
Group	Motor - Stepper	Lot charge	First unit
Motor	Stepper Motor (U42)	$ 45.00	$ 3,753.00
Gearbox	- none -	$ 0.00	$ 0.00
Resolver	- none -	$ 0.00	$ 0.00
RTD	- none -	$ 0.00	$ 0.00
Brake	- none -	$ 0.00	$ 0.00
Cable	- none -	$ 0.00	$ 0.00
Shaft	- none -	$ 0.00	$ 0.00
Subtotal		**$ 45.00**	**$ 3,753.00**
Model	**HT-U42**		
First Unit Price		**$ 3,798.00**	

Quantity	2 - 4	5 - 9	10 - 24
Price	$ 3,753.00	$ 3,377.70	$ 3,039.93

Pricing Details

- Motors That Survive - Motors That Survive - Motors That Survive -

Empire Magnetics Inc.

Price Builder

Environment	Extended temperature range (HT)	November 3rd, 2005	
Group	Motor - Stepper	Lot charge	First unit
Motor	Stepper Motor (U43)	$ 45.00	$ 4,703.00
Gearbox	- none -	$ 0.00	$ 0.00
Resolver	- none -	$ 0.00	$ 0.00
RTD	- none -	$ 0.00	$ 0.00
Brake	- none -	$ 0.00	$ 0.00
Cable	- none -	$ 0.00	$ 0.00
Shaft	- none -	$ 0.00	$ 0.00
Subtotal		**$ 45.00**	**$ 4,703.00**
Model	**HT-U43**		
First Unit Price		**$ 4,748.00**	

Quantity	2 - 4	5 - 9	10 - 24
Price	$ 4,703.00	$ 4,232.70	$ 3,809.43

Pricing Details

Empire Magnetics Inc.

Torque Chart for Stepper Motor U41

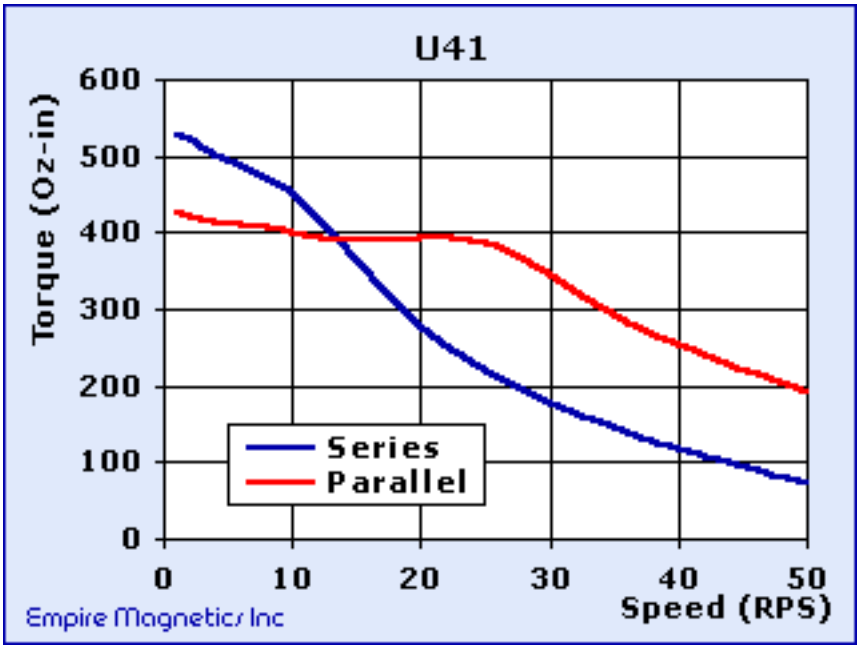

Series connected with 150 volt bipolar drive such as the Compumotor S/SX		Parallel connected with 150 volt bipolar drive such as the Compumotor S/SX	
Speed (RPS)	Torque (oz-in)	Speed (RPS)	Torque (oz-in)
1	526	1	424
2	522	2	422
4	504	4	415
6	488	6	412
8	471	8	407
10	452	10	401
15	365	15	389
20	278	20	393
25	220	25	387
30	178	30	345
35	146	35	294
40	118	40	253
50	75	50	191

Calculated torque speed curves for various voltages here

hat Survive - Motors That Survive - Motors That Survive

Empire Magnetics Inc.

Torque Chart for Stepper Motor U42

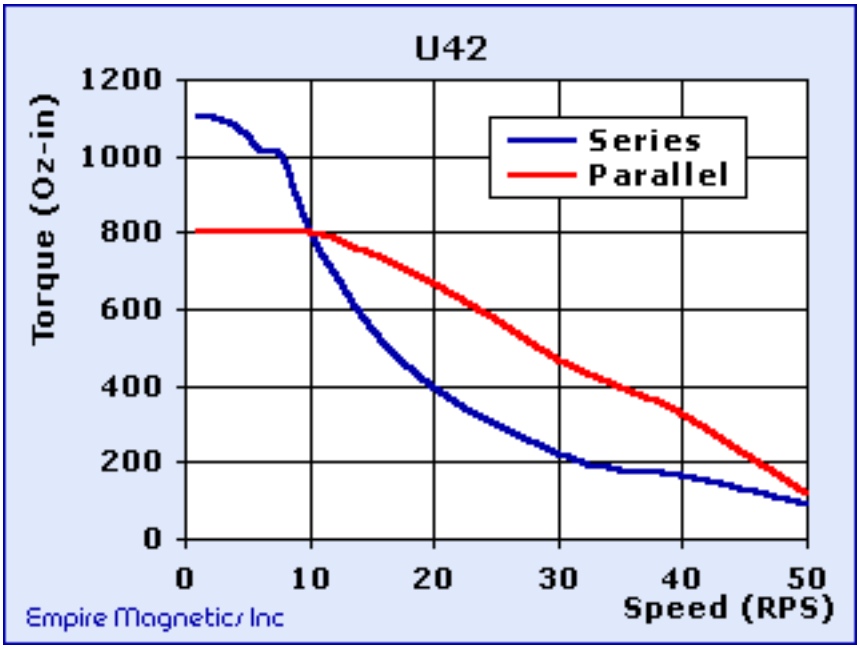

Series connected with 150 volt bipolar drive such as the Compumotor S/SX		Parallel connected with 150 volt bipolar drive such as the Compumotor S/SX	
Speed (RPS)	Torque (oz-in)	Speed (RPS)	Torque (oz-in)
1	1100	1	800
2	1100	2	800
4	1080	4	800
6	1020	6	800
8	1000	8	800
10	800	10	800
15	550	15	750
20	400	20	670
25	300	25	575
30	220	30	470
35	180	35	400
40	170	40	325
50	90	50	120

Calculated torque speed curves for various voltages here

hat Survive - Motors That Survive - Motors That Survive

Empire Magnetics Inc.

Torque Chart for Stepper Motor U43

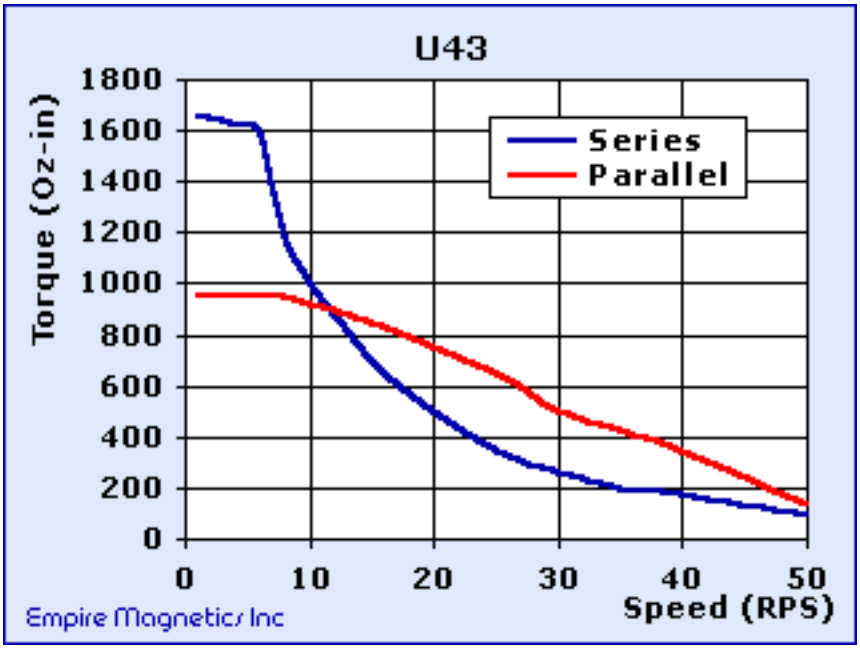

Series connected with 150 volt bipolar drive such as the Compumotor S/SX		Parallel connected with 150 volt bipolar drive such as the Compumotor S/SX	
Speed (RPS)	Torque (oz-in)	Speed (RPS)	Torque (oz-in)
1	1650	1	950
2	1650	2	950
4	1620	4	950
6	1600	6	950
8	1200	8	950
10	1000	10	920
15	700	15	850
20	500	20	750
25	350	25	650
30	260	30	500
35	200	35	425
40	180	40	345
50	95	50	140

Calculated torque speed curves for various voltages here

hat Survive - Motors That Survive - Motors That Survive

Empire Magnetics Inc.

Wiring Diagram for
Frame 42 Extended Temperature (-HT) Stepper Motors

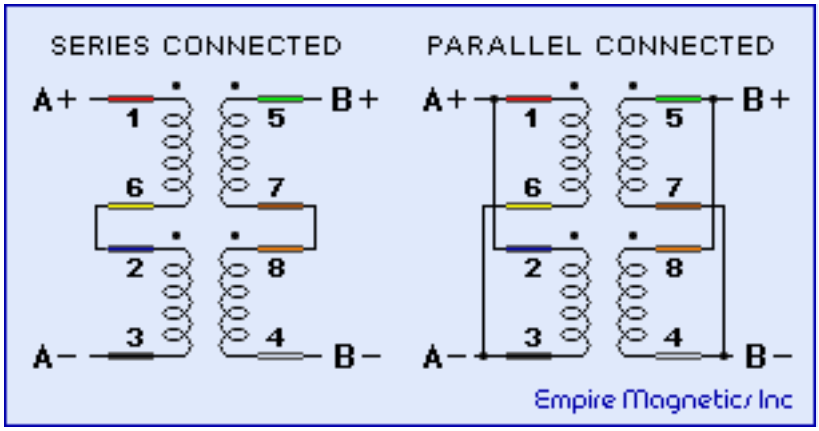

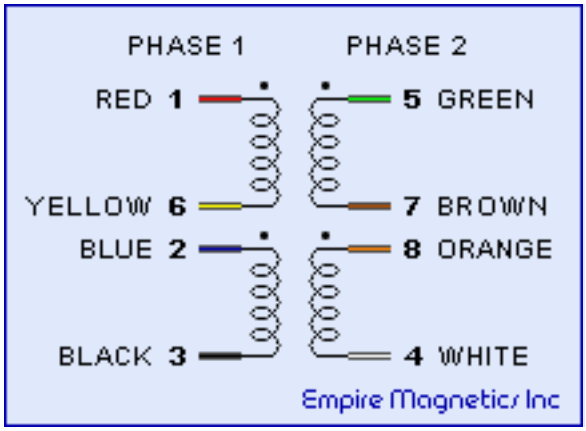

Standard Configuration is 8 Individual Lead Wires
Minimum 12 inches in Length

Motor model	Wire size	Wire diameter (Inches)
U41	18	0.0437
U42	18	0.0437
U43	18	0.0437

Cable information: When optional cables are ordered it is necessary to specify series or parallel configuration as 8 wire cable is too large for some motors. As such 4 wire cable is typically supplied.

Empire Magnetics Part number 00-0510-0002 four conductors of 18 AWG, with overall shield and jacket, nominal cable OD .209 inches, minimum bend radius 1.045 inches. Stranded silver-coated copper conductors, insulated with extruded TFE Teflon. Color-coded, cabled, silver-plated copper braid shield. White TFE Teflon tape-wrapped jacket mil-w-16878/4, temp rating -65° to 200° C, voltage: 600V (RMS)

| **Personal Toolbar** | Home | About EMI | Products | Contact EMI | FAQ | Site Map |
| Model Builder | Technical Articles | Technical Drawings |

hat Survive - Motors That Survive - Motors That Survive