Email
Phone: 877-478-3241
Phone: 877-IP-Tech1
Fax: 877-IP-Tech2
www.iptech1.com

STÖBER

STÖBER

ServoFit

STÖBER ServoFit® Gearheads 2009

Email
Phone: 877-478-3241
Phone: 877-IP-Tech1
Fax: 877-IP-Tech2
www.iptech1.com

STÖBER

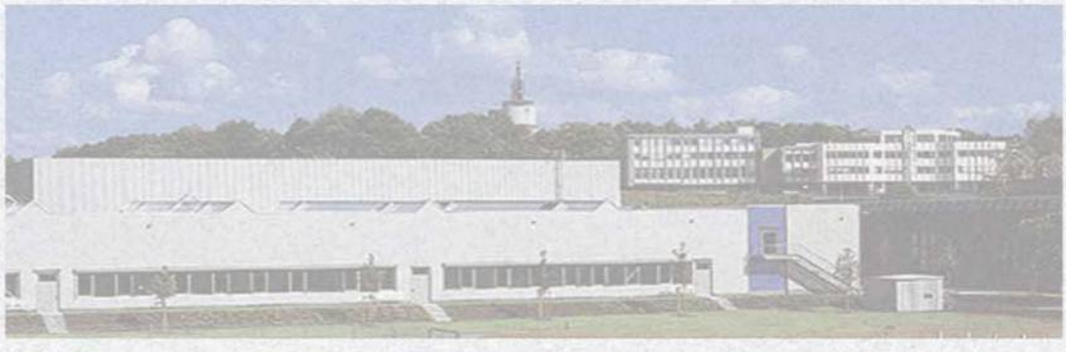

75 YEARS STÖBER

since 1934

Phone: 877-478-3241
Phone: 877-IP-Tech1
Fax: 877-IP-Tech2
www.iptech1.com

ServoFit® Gearheads
Table of Contents

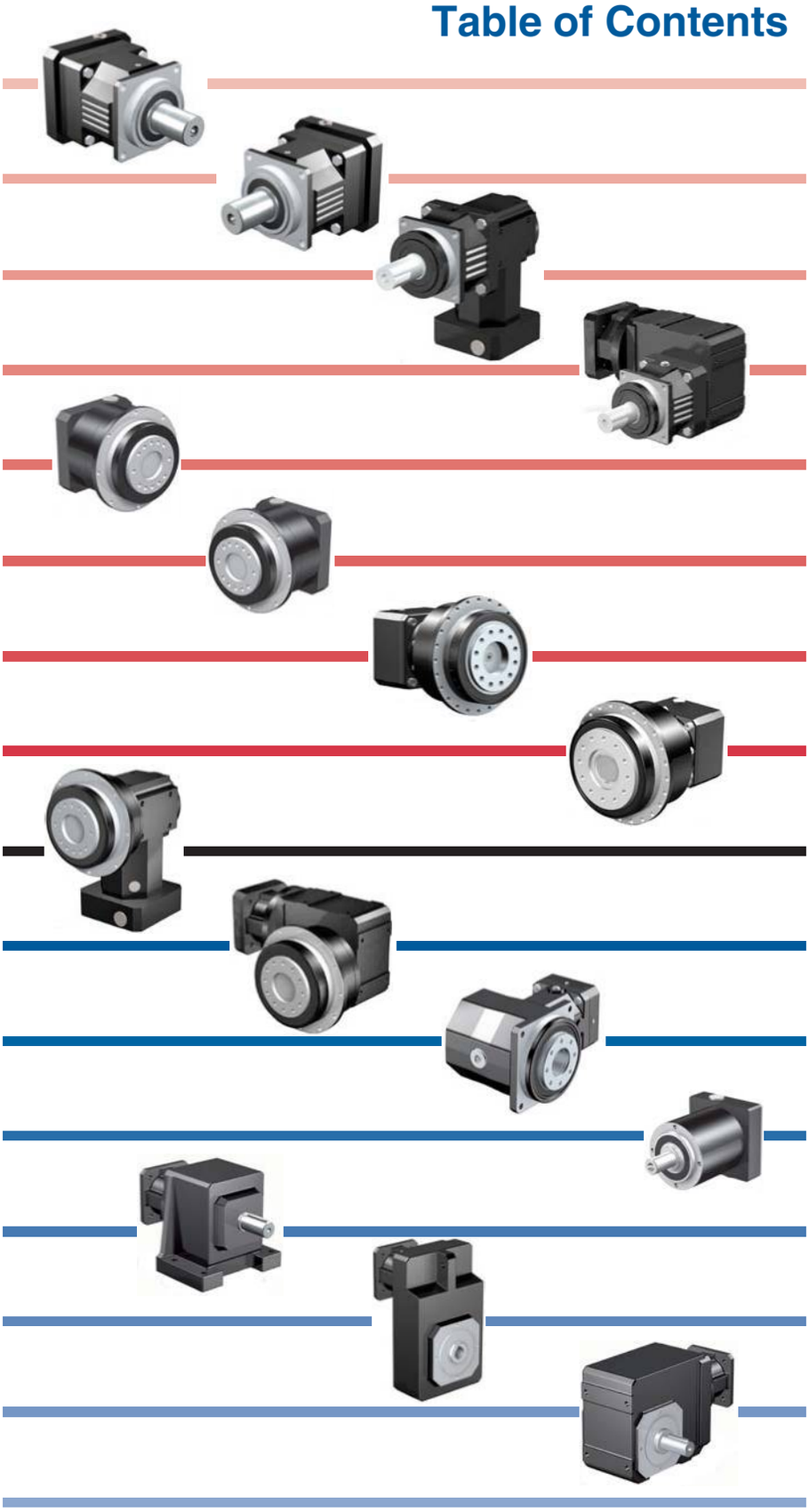

P Series
Features and Selection Data 14
Dimensions 24

PA Series
Features and Selection Data 26
Dimensions 40

PKX Series
Features and Selection Data 42
Dimensions 48

PK Series
Features and Selection Data 50
Dimensions 62

PH Series
Features and Selection Data 64
Dimensions 72

PHA Series
Features and Selection Data 76
Dimensions 90

PHQ Series
Features and Selection Data 92
Dimensions 98

PHQA Series
Features and Selection Data 100
Dimensions 106

PHKX Series
Features and Selection Data 110
Dimensions 118

PHK Series
Features and Selection Data 120
Dimensions 130

KS Series
Features and Selection Data 132
Dimensions 136

PE Series
Features and Selection Data 142
Dimensions 145

C Series
Features and Selection Data 146
Dimensions 168

F Series
Features and Selection Data 176
Dimensions 184

K Series
Features and Selection Data 194
Dimensions 214

Miscellanous/Engineering
Motor Plate Specifications/Installation 229
Wobble Free Bushing Installation 232
Shaft Options and Loads 238
Lubrication/Mounting Information 246
Selection Procedure 252

Phone: 877-478-3241
Phone: 877-IP-Tech1
Fax: 877-IP-Tech2
www.iptech1.com

ServoFit® Gearheads

STÖBER

P Series

- Backlash — ≤ 3 arc/mins
- Ratios — 3:1 to100:1
- Input RPM — up to 8,000
- Noise Level — as low as 61 dB(A)**
- Output Torque up to 17,700 in.lbs.
- Available:
  - —Washdown Food Duty

PA Series

- Backlash — ≤ 1 arc/mins
- Ratios — 3:1 to100:1
- Input RPM — up to 8,000
- Noise Level — as low as 61 dB(A)**
- Output Torque up to 8,850 in.lbs.
- Available:
  - —Washdown Food Duty

PKX Series

- Backlash — ≤ 4 arc/mins
- Ratios — 3:1 to 300:1
- Input RPM — up to 6,000
- Noise Level — as low as 70 dB(A)**
- Output Torque up to 17,700 in.lbs.

Available:
  - —Washdown Food Duty

PK Series

- Backlash — ≤ 3.5 arc/mins
- Ratios — 12:1 to 561:1
- Input RPM — up to 6,000
- Noise Level — as low as 63 dB(A)**
- Output Torque up to 17,700 in.lbs.

Available:
  - —Washdown Food Duty

PH Series

- Backlash — ≤ 3 arc/mins
- Ratios — 4:1 to 121.0:1
- Input RPM — up to 8,000
- Noise Level — as low as 61 dB(A)**
- Output Torque up to 44,290 in.lbs.

PHA Series

- Backlash — ≤ 1 arc/mins
- Ratios — 4:1 to 121.0:1
- Input RPM — up to 8,000
- Noise Level — as low as 61 dB(A)**
- Output Torque up to 44,290 in.lbs.

PHQ Series

- Backlash — ≤ 3 arc/mins
- Ratios — 18:1 to 600:1
- Input RPM — up to 7,000
- Noise Level — as low as 62 dB(A)**
- Output Torque up to 57,570 in.lbs.

PHQA Series

- Backlash — ≤ 1 arc/mins
- Ratios — 18:1 to 600:1
- Input RPM — up to 7,000
- Noise Level — as low as 62 dB(A)**
- Output Torque up to 57,570 in.lbs.

PHKX Series

- Backlash — ≤ 3.5 arc/mins
- Ratios — 4:1 to 300:1
- Input RPM — up to 6,000
- Noise Level — as low as 70 dB(A)**
- Output Torque up to 66,430 in.lbs.

PHK Series

- Backlash — ≤ 3.5 arc/mins
- Ratios — 16:1 to 561:1
- Input RPM — up to 6,000
- Noise Level — as low as 63 dB(A)**
- Output Torque up to 11,000 in.lbs.

KS Series

- Backlash — ≤ 4 arc/mins
- Ratios — 6:1 to 200:1
- Input RPM — up to 6,000
- Noise Level — as low as 62 dB(A)**
- Output Torque up to 2,210 in.lbs.

PE Series

- Backlash — ≤ 15 arc/mins
- Ratios — 5:1 to 100:1
- Input RPM — up to 8,000
- Noise Level — as low as 60 dB(A)**
- Output Torque up to 1,060 in.lbs.

C Series

- Backlash — ≤ 20 arc/mins
- Ratios — 2:1 to 276:1*
- Input RPM — up to 4,500
- Noise Level — as low as 53 dB(A)**
- Output Torque up to 62,000 in.lbs.
- Available:
  - —Inch or Metric Output
  - —Beverage and Food Duty

F Series

- Backlash:
  - Standard ≤ 11 arc/mins
  - Reduced ≤ 7 arc/mins
- Ratios — 4:1 to 540:1*
- Input RPM — up to 4,500
- Noise Level — as low as 53 dB(A)**
- Output Torque up to 9,700 in.lbs.
- Available:
  - — Inch or Metric Output
  - —Solid, Hollow, Single and Double Bushing
  - —Beverage and Food Duty

K Series

- Backlash:
  - Standard ≤ 12 arc/mins
  - Reduced ≤ 6 arc/mins
- Ratios — 4:1 to 381:1*
- Input RPM — up to 4,500
- Noise Level — as low as 53 dB(A)**
- Output Torque up to 106,000 in.lbs.
- Available:
  - — Inch or Metric Output
  - —Solid, Hollow, Single and Double Bushing
  - —Beverage and Food Duty

* Ratios standard in one housing. Higher ratios available in compound units.
** dB(A) rating measured at 1 meter distance with 3000 RPM input.

See web site for drawings.

ServoFit® Gearheads

The STOBER offering of ServoFit™ gearheads will enable you to fit all your servo needs. The ServoFit™ Precision Planetary Gearheads are for compact, highly dynamic applications. The ServoFit™ Modular System was designed for those applications where the compact size of a planetary gearhead is not needed. With these two lines, STOBER Drives offers the world's largest variety of servo gearheads.

The STOBER difference = VALUE for you!

Fits Any Servo Motor

Motor plates will fit a wide selection of NEMA, IEC, or custom servo motors.

Full warranty on all reducer components: gears, covers, material and workmanship, etc. Normal wear items (oil seals, bearings, etc.) are covered for 2 years.

Most sizes are available with STANDARD 3 DAY DELIVERY. (Does not apply to PA and PHA.) Custom motor plates — 10 days maximum.

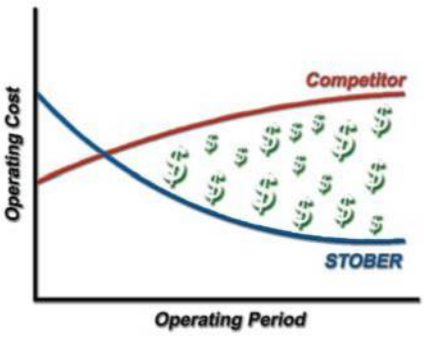

24 Hours – No expedite fee
Daytime Phone: 606 759-5090
On-Call Emergency: 606 563-6035

Helical Gears

- Highest torque capacity
- Maximum efficiency
- Maintains low noise level

Exceptional Performance

- Low noise level
- Cool running
- High speed capacity
- High torque capacity
- Low backlash

1 conventional planetary gearhead produces the same noise level as 16 STOBER planetary gearheads with HeliCamber™ gearing technology.

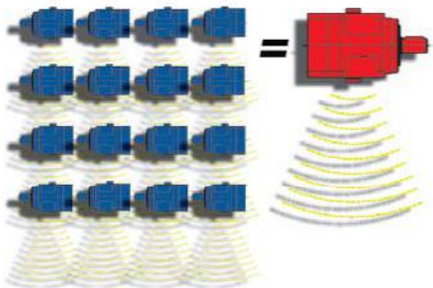

High Quality Lubricant

- Wide temperature range
- Enhanced oxidation stability
- Optimum corrosion protection
- Superior wear protection

See web site for drawings.

ServoFit® Gearheads
Beverage and Food Duty

Beverage and Food Duty

- Lubricated for Life — Double Output Seals (where possible)
- Maintenance Free — No Breather
- Stainless Output Bushing, Shaft, or Bore
  —Output Covers Included with Double Bushings
  —Output Covers Optional with Single Bushing and Quills
- Multilayer Industrial 316 Stainless Steel Epoxy Coating
- 5 Year Warranty

SILVER BULLET AM™

Standard Coating:

• BEVERAGE	1-Primer 2-Industrial 316 Stainless Steel Epoxy
• FOOD	1-Primer 2-Industrial 316 Stainless Steel Epoxy 1-Silver Bullet Anti-Microbial™ Epoxy
• Options	Layer of Ultra Clear Industrial Epoxy White Epoxy

ALL Stainless Steel Hardware

Double Sealed Output — with a dual lip outer seal and a single lip inner seal

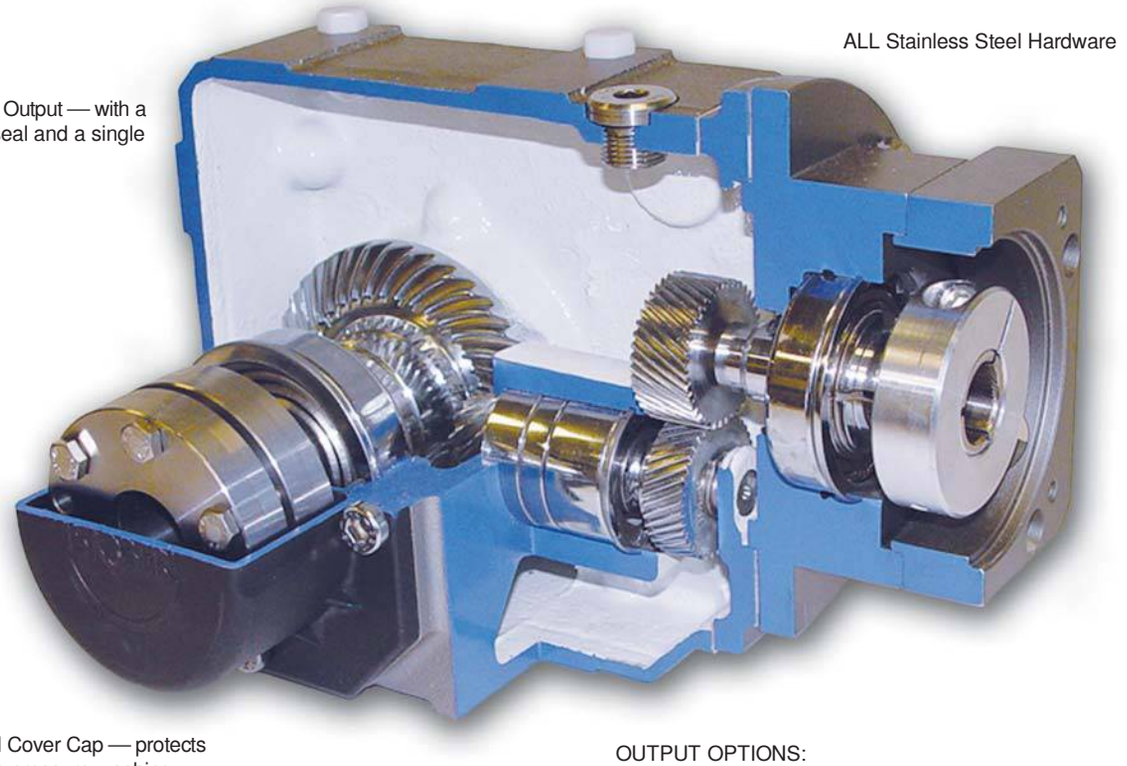

Outside Closed Cover Cap — protects seals from high pressure washing

Inside Split Cover Cap — enables easy assembly onto the shaft

OUTPUT OPTIONS:

- Patented (U.S. Patent Number 5,496,127) Stainless Steel Double Sided Bushing Mounted into Stainless Steel Output Quill — easily mounts onto standard cold finished, ground, or stainless shafting.
- Single side output shaft
- Hollow output

Silver Bullet AM™ is a registered trademark of Burke Industrial Coatings.

Mounting Position must be specified when ordering. See Page 246.

Phone: 877-478-3241
Phone: 877-IP-Tech1
Fax: 877-IP-Tech2
www.iptech1.com

ServoFit® Gearheads
Beverage and Food Duty

Beverage and Food Duty

- Totally Enclosed
- Lubricated for Life
- Maintenance Free

"F" Series Hollow Output.
(Stainless steel output is not available in all sizes.)

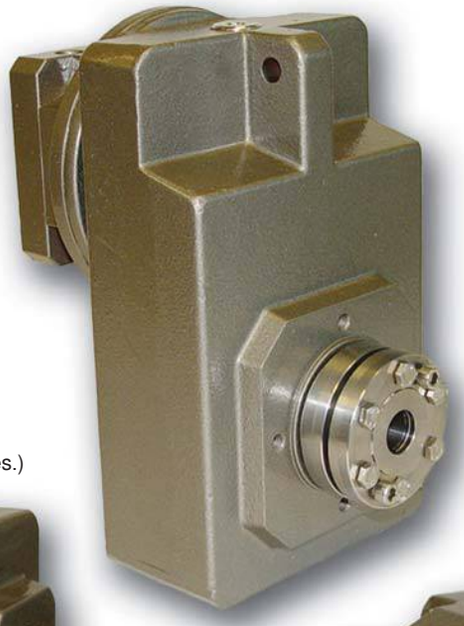

"C" Series Solid Shaft
(Stainless steel output is not available in all sizes.)

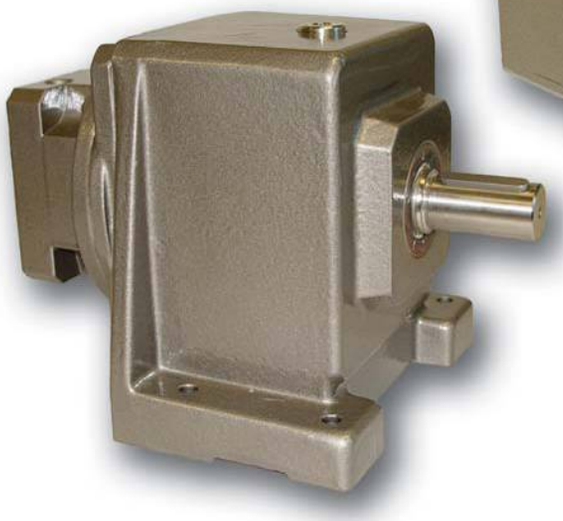

"P" and "PKX" Series Precision Planetary – Sizes 3 thru 5
(Stainless steel output is not available in all sizes.)

Silver Bullet AM® is a registered trademark of Burke Industrial Coatings.

Mounting Position must be specified when ordering. See Page 246.

Email
Phone: 877-478-3241
Phone: 877-IP-Tech1
Fax: 877-IP-Tech2
www.iptech1.com

ServoFit® Gearheads
ServoCool

The compact design of planetary gearhead allows very little area for heat dissipation. While the STOBER Precision Planantary Gearhead has the lowest operating temperature available, even it's rating in continuous applications is limited by heat, especially with large planetaries or units with small ratios. The ServoCool planetary gearhead is made possible by adding a ventilation module to the existing ServoFit Precision Planetary Gearhead. These units are currently available in P and PH Series.

Connection flange cool plate with intake and outlet slots

Modular design — the ventilation module can be purchased as a kit to retrofit existing P and PH Series gearheads.

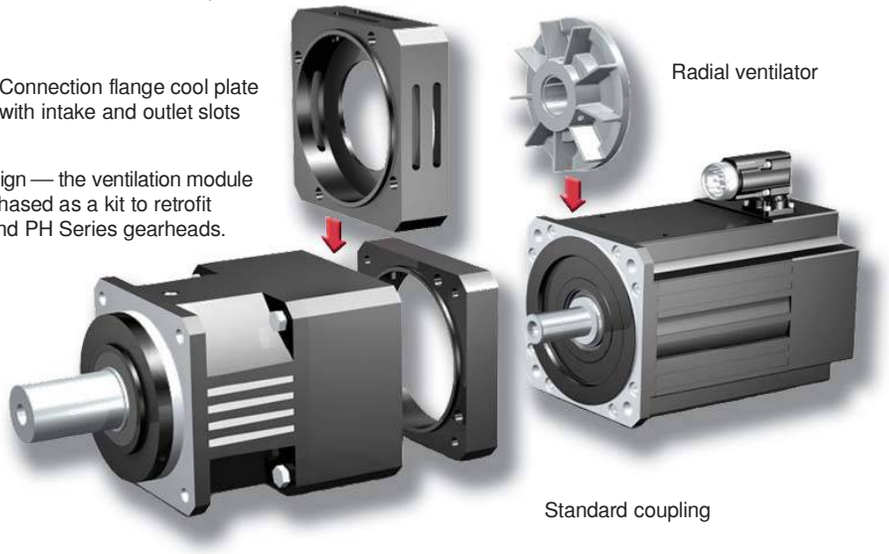

Radial ventilator

Standard coupling

Air is accelerated outward in a radial manner and then escapes through the outlet slots. Due to the resulting negative pressure in the motor adapter, air is pulled in through the inlet slots.

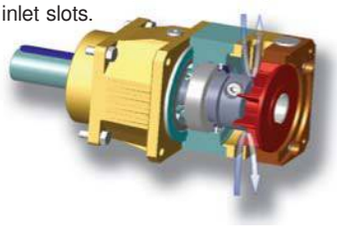

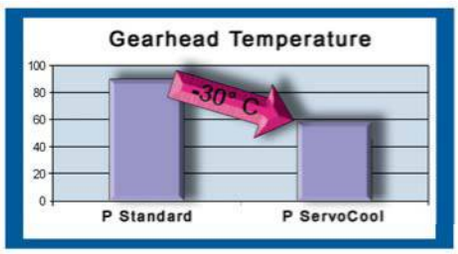

According to data from lubricant suppliers, the lifespan of oil doubles, at certain temperatures, if operating temperature is reduced by 10°C. Adding the ServoCool ventilator reduces gearhead temperature 22°C — quadrupling the expected lubricant life.

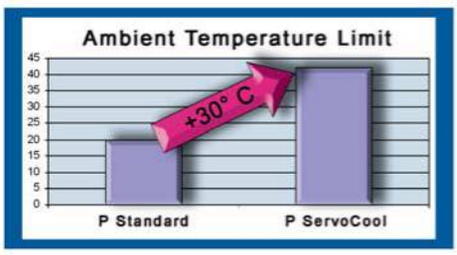

- Synthetic oil
- Lower temperature means longer life
- Lubricated for life — maintenance free solutions

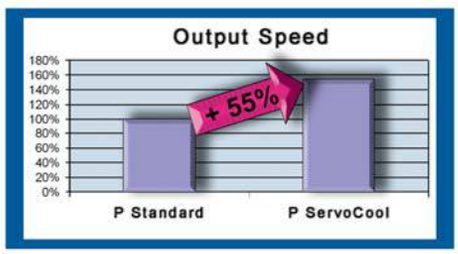

- Ventilator fan mounts to motor shaft
- Forced air ventilation improves performance
- Modular design "fits" existing units
- Optional for P and PH Series

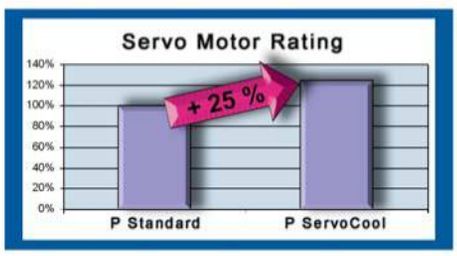

- Increased motor performance
- No added motor
- No additional wiring
- More compact than external motor fan

See web site for drawings.

Phone: 877-478-3241
Phone: 877-IP-Tech1
Fax: 877-IP-Tech2
www.iptech1.com

ServoFit® Gearheads
"P" Series – Precision Planetary
Output Shaft Loads

"R" – Deep Groove Ball Bearing
Characteristics:
- Minimal frictional torque
- Good Radial load capacity
- Axial load approx. 35% of radial

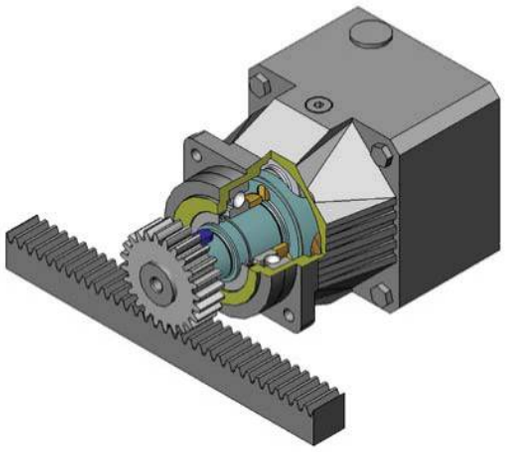

Applications:
- Spur geared rack/pinion
- Couplings
- Belt with or without light tension

"D" – Double Row Angular
Characteristics:
- Low frictional torque
- Good radial bearing capaci
- Axial load approx. 50% of r

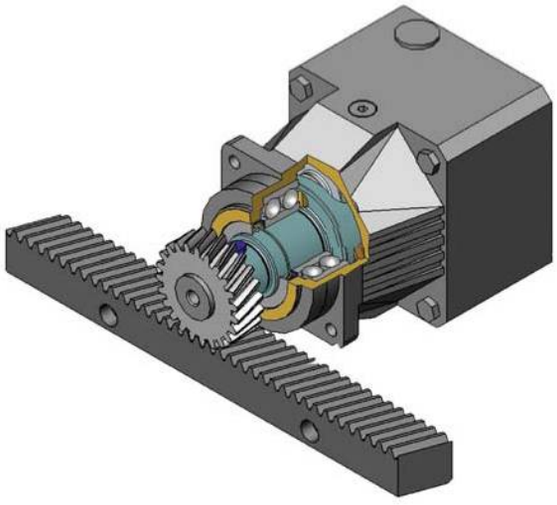

Applications:
- Helical geared rack/pinion
- Couplings with high axial load
- Belt with or without light tension

"Z" – Cylindrical Roller Bearing
Characteristics:
- Very good radial load capacity
- Axial load approx. 20% of radial loac

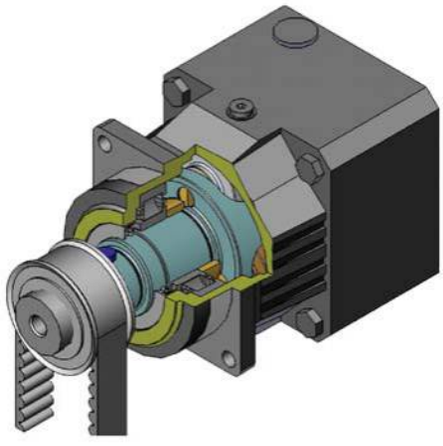

Applications:
- Prestressed belt drive
- Prestressed spur rack drive
- Applications with high radial loads and/or high service requirements

See Page 239 for shaft load.

Phone: 877-478-3241
Phone: 877-IP-Tech1
Fax: 877-IP-Tech2
www.iptech1.com

ServoStop
Motor Adapter with Integrated Brake

STÖBER

Available with the following units:

- ServoFit Precision Planetary Gearheads — P, PA, PH, and PHA
- Right Angle Planetary Gearheads — PK and PHK
- ServoFit Modular System Gearheads — C, F, and K
- See ***www.stober.com*** for more information.

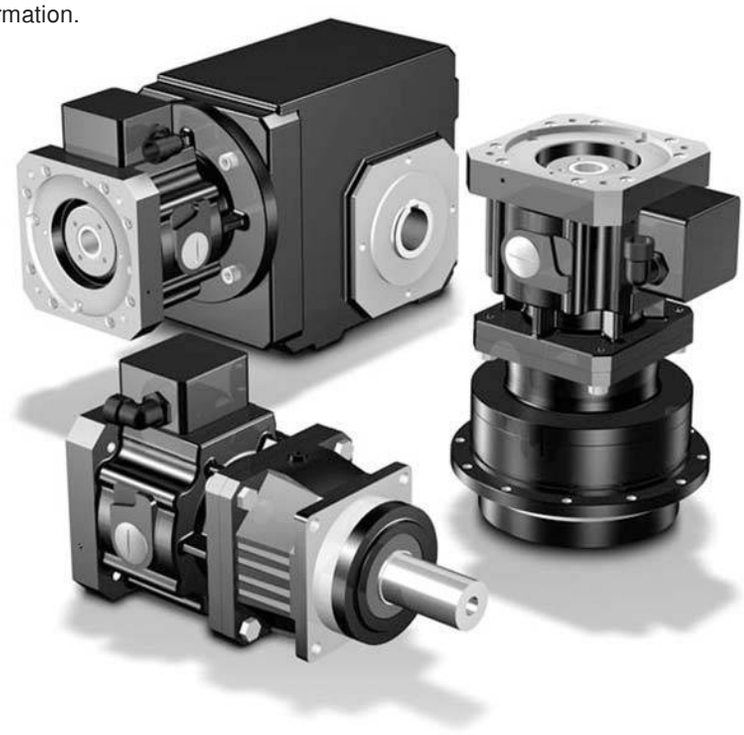

- Saves braking at EMERGENCY STOP and power cut
- High durability even at EMERGENCY STOP
- Motor horizontal is recommended but if vertical, mount with motor up.
- Prevents accidental sliding or falling of vertical axis with gravity load absolutely reliable
- Compactness due to integration into gear reducer
- Plug-in coupling allows easy dismounting of servo motor in every position even with brake engaged
- Available with electrical or manual wear control for added safety.
- Manual hand release available
- Fits all standard servo motors
- IP54 Rated
- CSA Approved

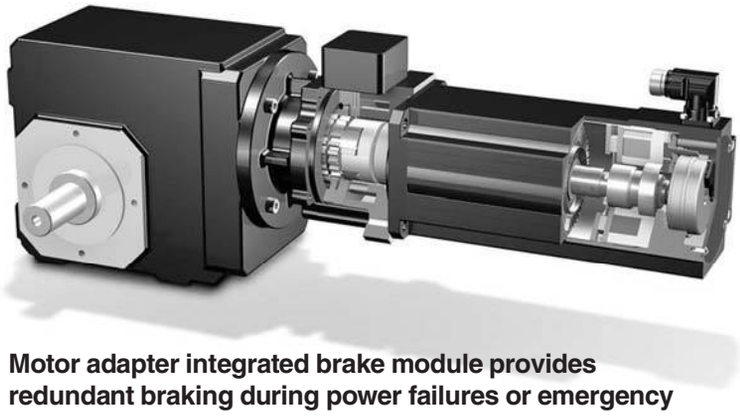

Motor adapter integrated brake module provides redundant braking during power failures or emergency stops in hazarduous situations.

See web site for drawings.

ServoStop
Motor Adapter with Integrated Brake

Combinations of series with ServoStop brakes now available from STOBER Drives Inc.

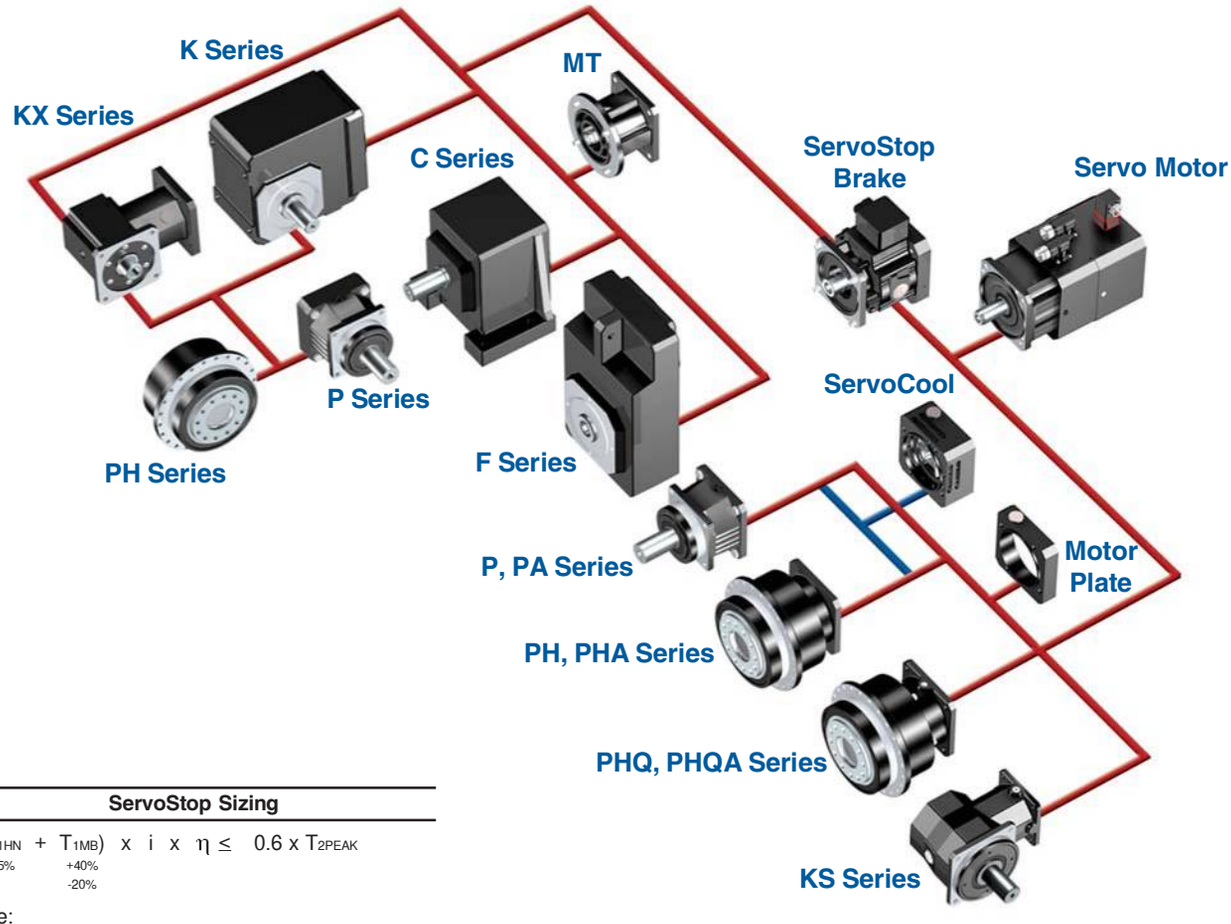

ServoStop Sizing

$$(T_{1HN} \underset{\pm 15\%}{} + T_{1MB} \underset{-20\%}{\overset{+40\%}{}}) \times i \times \eta \leq 0.6 \times T_{2PEAK}$$

where:

T_{1HN} = ServoStop Braking Torque
T_{1MB} = Servo Motor Braking Torque
i = Ratio
η = Efficiency of Gear Reducer
T_{2PEAK} = Peak Output Torque of Gear Reducer

Part No. and Capacity

Unit Series/Brake No.			T_{1HN} — Braking Torque							
C, F, K PK, PHK	P PA	PH PHA	Nm	inlbs	Nm	inlbs	Nm	inlbs	Nm	inlbs
MB20	MB21	MB22	8	71	12	106	16	142	24	212
MB30	MB31	MB32	16	142	24	212	32	283	45	398
MB40	MB41	MB42	—		50	442	72	637	100	885

THE FOLLOWING INFORMATION IS REQUIRED FOR ANY UNIT:

Coil Voltage — 24 Volt, 104 Volt
Hand Release — Yes, No
Braking Torque — See above table.

See web site for drawings.

ServoFit® Gearhead Application Support

ServoSoft® application sizing software:

- Extremely accurate
- Sizes for peak and nominal torques
- Sizes for peak and nominal speeds
- Radial and axial loads
- Data base for all STOBER servo products

Professional Sizing Software

Sizing for 11 Different Types of Drive Mechanisms

- Rotary Axis
- Belt & Pulley
- Conveyor
- Dual Conveyor
- Ball Screw
- Rack & Pinion
- Dual Rack & Pinion
- Feed Roll
- Winder (center driven
- Winder (surface driven)
- Slider Crank

Motion Profile calculates the gearbox distance, velocity, radial and axial loads, etc.

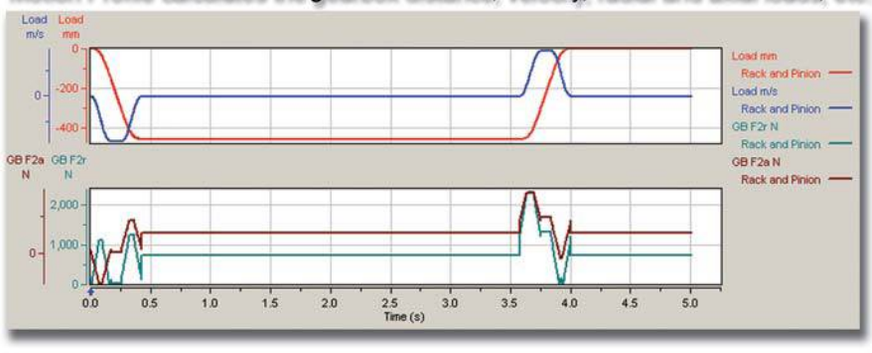

Ratio analysis tool - choosing optimal ratio.

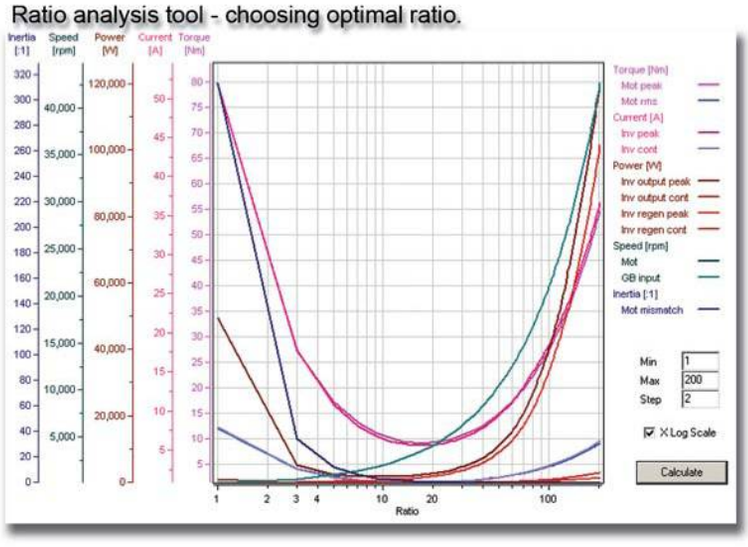

ServoSoft® is a registered trademark of ControlEng Corportation.

Phone: 877-478-3241
Phone: 877-IP-Tech1
Fax: 877-IP-Tech2
www.iptech1.com

ServoFit® Gearhead Application Support

Data Base of ALL STOBER servo products

Vendor	Model	Typ1	Typ2	i	s	d1max (mm)
STOBER	K914_1890 MT40/38	Hollow	Shaft	188.757	4	38
STOBER	K914_1920 MT30/32	Hollow	Shaft	191.67	4	32
STOBER	K914_2430 MT40/38	Hollow	Shaft	243.275	4	38
STOBER	K914_2470 MT30/32	Hollow	Shaft	247.029	4	32
STOBER	K914_2940 MT30/32	Hollow	Shaft	293.764	4	32
STOBER	K914_3740 MT30/32	Hollow	Shaft	373.696	4	32
STOBER	P221_0040 KX301VF0I	Hollow	Shaft	4	2	19
STOBER	P221_0040 KX301VF0I	Hollow	Shaft	8	2	19
STOBER	P221_0040 KX301VF0I	Hollow	Shaft	12	2	19
STOBER	P221_0040 MT/11	Hollow	Shaft	4	1	11
STOBER	P221_0040 MT/14	Hollow	Shaft	4	1	14
STOBER	P221_0040 MT/9	Hollow	Shaft	4	1	9
STOBER	P221_0040 MTL/19	Hollow	Shaft	4	1	19
STOBER	P221_0050 KX301VF0I	Hollow	Shaft	5	2	19
STOBER	P221_0050 KX301VF0I	Hollow	Shaft	10	2	19
STOBER	P221_0050 KX301VF0I	Hollow	Shaft	15	2	19
STOBER	P221_0050 MT/11	Hollow	Shaft	5	1	11
STOBER	P221_0050 MT/14	Hollow	Shaft	5	1	14

Gear Reducer performance data

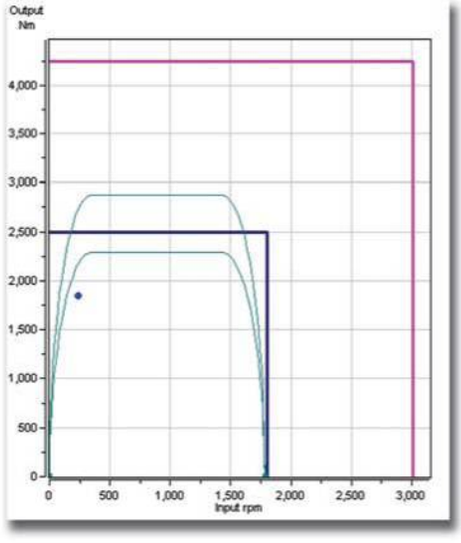

See web site for drawings.

Phone: 877-478-3241
Phone: 877-IP-Tech1
Fax: 877-IP-Tech2
www.iptech1.com

ServoFit® Gearhead Application Support

Drawings are available in a format to suit your application. We can provide eDrawings, 2D, 3D, CAD drawings with six views, or certified faxable prints.
The eDrawing application gives you the power to view 3D models and 2D drawings with no special software. The viewer and drawing are contained in one simple download. eDrawings eliminate the communication barriers that designers and engineers deal with daily. They are small enough to email, are self-viewing, and significantly easier to understand, plus, there is no more uncertainty about whether the recipient will be able to open and view the drawing file you send.
Check our web site (www.stober.com) for product drawings in the configuation you need. Call Technical Support for information that is not shown or e-mail *sales@stober.com* or *drawings@stober.com* with your request.

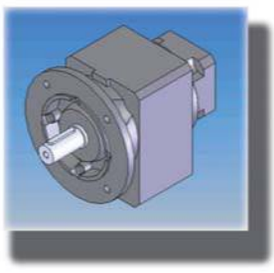
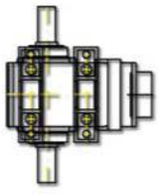

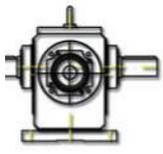

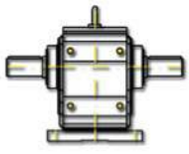

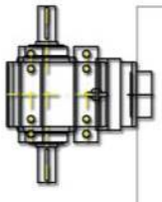
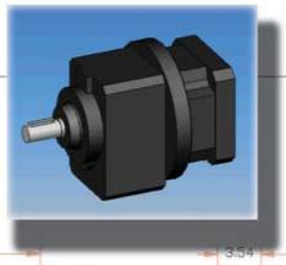

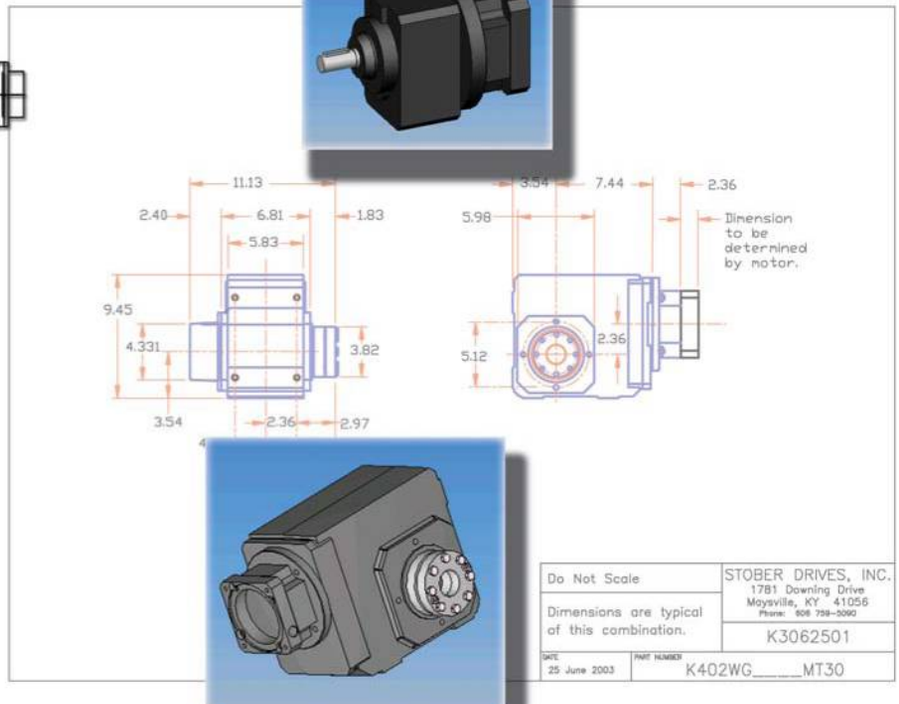

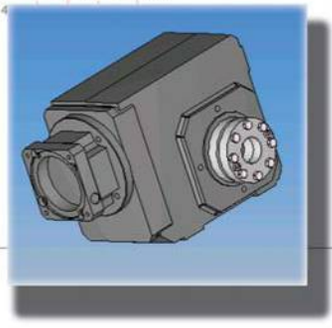

ServoFit® Gearhead Application Support

Drawing files for STOBER products from the web.

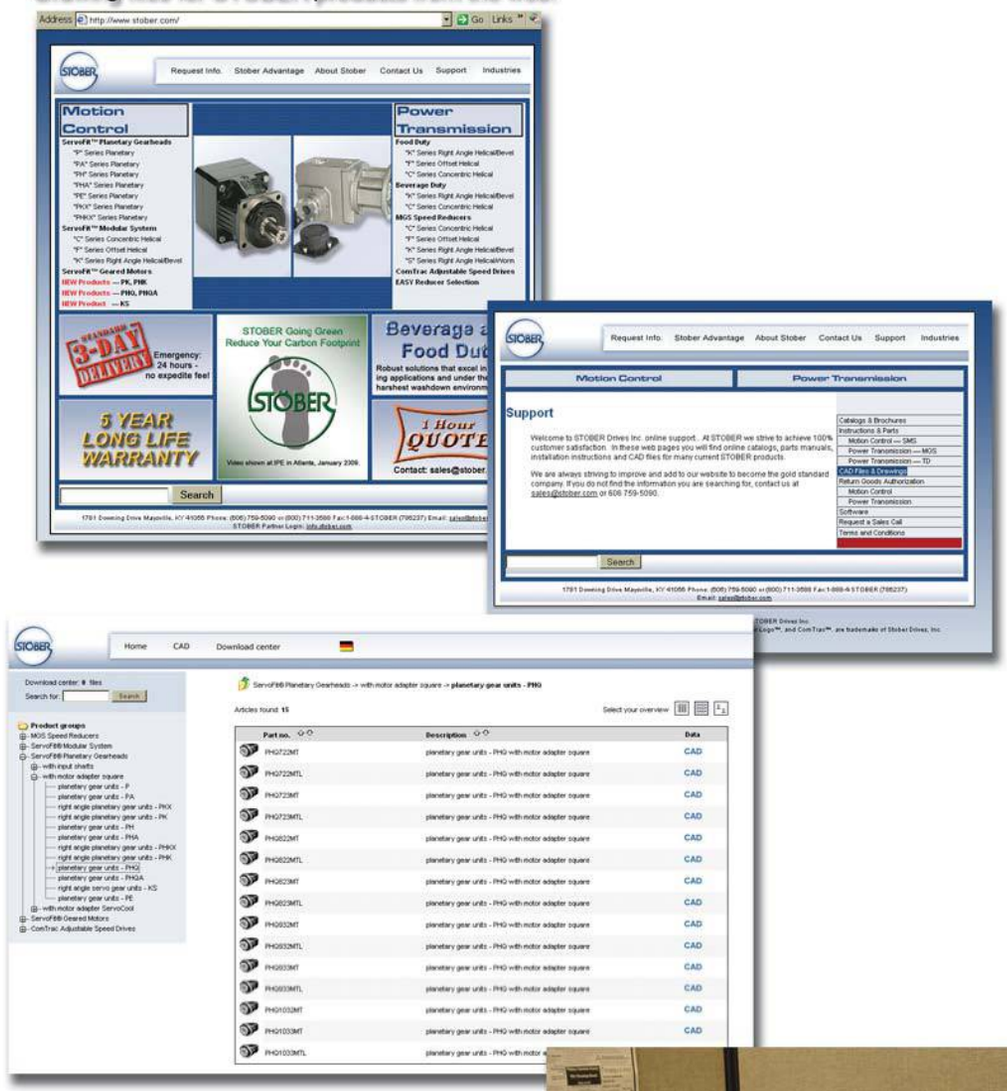

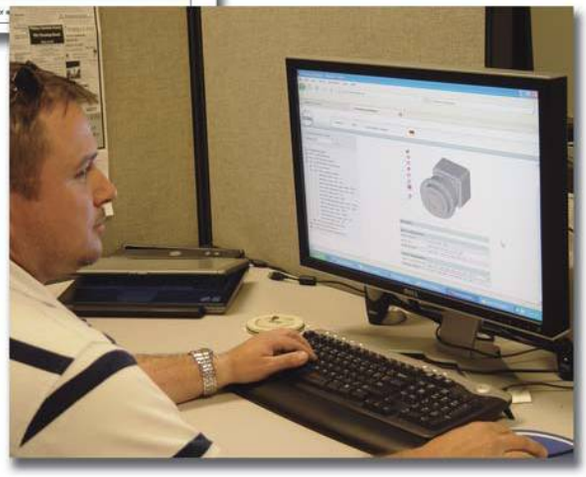

See web site for drawings.

"K" Series–Right Angle Helical/Bevel ServoFit® Modular System Overview

STÖBER

Output Style + Housing Style + TriAdapt® Input = Gearhead Configurations

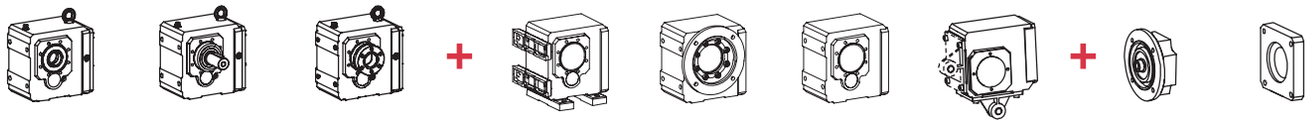

Style A Hollow Output | Style V Solid Output | Style W Bushing Output | + | Style N Foot Mount | Style F Round Flange | Style G Tapped Holes | Style GD Torque Arm Bracket | + | MT Motor Adapter | Motor Plate Fit ANY Servo Motor

Gearhead Configurations

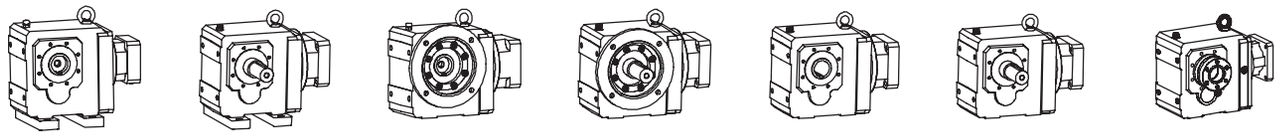

Style AN Hollow Output | Style VN Solid Output | Style AF Hollow Output | Style VF Solid Output | Style AG Hollow Output | Style VG Solid Output | Style WG Bushing Output

Mounting Positions *(Units shown K5-K9, Shaft Side 4. See Page 246 for additional mounting information.)*

EL1 EL2 EL3 EL4 EL5 EL6

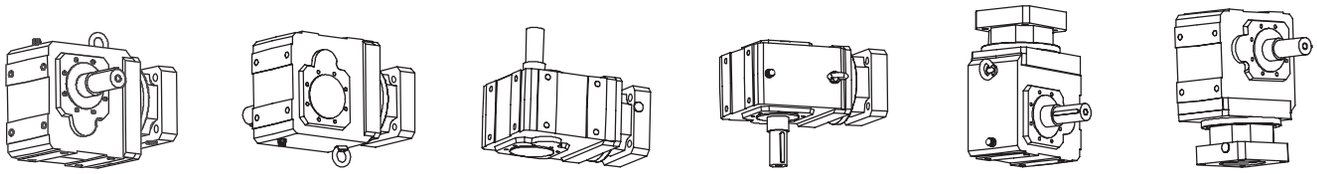

Part No. Explanation with OPTIONS and REQUIRED INFORMATION

K 6 1 3 A GD 0580 MT40 B

This designation is only required when ordering a: **B** — Beverage Duty, **F** — Food Duty

TriAdapt® Motor Adapter Size: **MT10**, **MT20**, **MT30**, **MT40**, **MT50**

Nominal Ratio: (**0580** = 57.5:1)

HOUSING STYLE
"**F**" Housing Style — Flange Mounting ..... **SPECIFY IN A NOTE**: Flange on Side 3 or Side 4
"**G**" Housing Style — Tapped Holes
"**GD**" G Housing Style with Torque Arm Bracket .... **SPECIFY IN A NOTE**: Torque Arm Bracket on Side 1 or Side 5
"**N**" Housing Style — Foot Mount ..... **SPECIFY IN A NOTE**: Feet on Side 1 or Side 5

OUTPUT STYLE
"**V**" Solid Output ..... **SPECIFY IN A NOTE**: Standard or Stainless Steel[1)]
Imperial or Metric[1)]
Single or Double
IF Single: Shaft on Side 3 or Side 4
"**A**" Hollow Output ..... **SPECIFY IN A NOTE**: Standard or Stainless Steel[1)]
Imperial or Metric[1)]
"**W**" Wobble Free Bushing ..... **SPECIFY IN A NOTE**: Bushing Part Number
Single or Double Bushing
IF Single: Side 3 or Side 4

[1)] Not available in all sizes.

No. of Stages (**3** = 3 Stage, determined by ratio)
Design Generation
Unit Size No.
Right Angle Helical/Bevel

Bushing Part No. Explanation

W F 5 – 107
Output Bore in inches — **107** = $1\frac{7}{16}$
Base Module Size example: K**5**13/K**5**14)
Wobble **F**ree Single Side Bushing

W F B 5 – 107
Output Bore in inches — **107** = $1\frac{7}{16}$
Base Module Size example: K**5**13/K**5**14)
Wobble **F**ree Double Side

THE FOLLOWING INFORMATION IS REQUIRED FOR ANY UNIT:

Mounting Position — EL1 EL2 EL3 EL4 EL5 EL6 (See also Page 171.)
Motor — Motor Manufacturer and Model Number
Paint — Black (Standard) ..... White ..... Stainless
Package Option — Beverge Duty ..... Food Duty
Backlash Option — Standard or Reduced Backlash

Refer to Page 250 for ServoFit Gearhead Selection Procedure.

Phone: 877-478-3241
Phone: 877-IP-Tech1
Fax: 877-IP-Tech2
www.iptech1.com

"K" Series—Right Angle Helical/Bevel ServoFit® Modular System

Right angle helical/bevel gear drives offer higher input-to-output efficiencies than conventional worm gear drives or right angle planetary gearheads — making them the optimal drive for truly demanding continuous applications.

Performance Specifications:

- Input RPM up to 4,500 RPM
- Nominal output torque — 109 to 106,000 in. lbs. (12-11,900Nm)
- Reducer ratios from 4:1 to 381:1
- 5 year limited warranty (2 years on bearings, seals, etc.)
- Ambient temperature — 0° C to +40°C (104° F) [Unit temperature ≤ 80° C Max.]
- Noise level — as low as 53 dB(A)
- Maintenance free
- Can be back driven

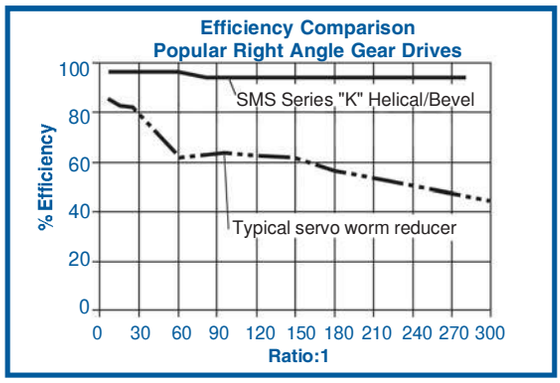

STANDARD 3-DAY DELIVERY

Motor plate can easily be changed to fit your choice of motors.

High efficiency spiral bevel gearing provides quiet operation and excellent torque carrying capacity

High quality helical gearing is case hardened to 58-62 Rockwell C. Precision finished for low noise and long service life. When the backlash is set by our manufacturing and assemble methods it remains consistent throughout the life of the reducer without further need for adjustment. Standard backlash is ≤12 arc minutes Reduced backlash is ≤6 arc minutes

Output Options:
- Solid shaft
- Hollow
- Backlash free, wobble free bushings

Also available in metric or stainless shaft or quill

One-piece cast iron housing with precision machined bearing supports assure gearset alignment, prolongs bearing life, provides exceptional overhung load capacities, and eliminates leakage problems common to drives with bolt-on output covers.

Double lip seals keep oil in and contaminants out. Double seals available for severe duty applications.

K

Shipped with the proper amount of oil to prevent gear damaging dry start-ups.

Also available in washdown, poultry duty, food duty, and beverage duty. Maximum 10 working days for custom motor plates.

See web site for drawings.

"K" Series–Right Angle Helical/Bevel ServoFit® Modular System Selection Data

STÖBER

Part Number	Reducer Ratio i		Input RPM Maximum Continuous		Input RPM Maximum Cyclic	Backlash arcmins	Input Inertia	Torsional Stiffness per arcmin		Output Torque Nominal [2]		Output Torque Acceleration		Output Torque Peak [3]	
										$M_{2N \le 2000\ RPM}$		M_{2B}		M_{2PEAK}	
	Nom.	Exact	n_{1DBH}	n_{1DBV}	n_{1ZB}	$\Delta\varphi$ [1]	J_1 kgcm²	C_2 in.lbs.	C_2 Nm	in.lbs.	Nm	in.lbs.	Nm	in.lbs.	Nm
K102 with MT TriAdapt® Motor Adapter														**Noise Level ≤ 53 dB(A) [4]**	
K102_0040 MT10	4.000	4/1	3,300	2,800	4,500	12/6	1.4	25	2.8	368	42	368	42	460	52
K102_0040 MT20	4.000	4/1	3,300	2,800	4,500	12/6	2.0	25	2.9	512	58	693	78	866	98
K102_0056 MT10	5.568	1520/273	3,300	2,800	4,500	12/6	1.3	38	4.3	512	58	512	58	640	72
K102_0056 MT20	5.568	1520/273	3,300	2,800	4,500	12/6	1.9	39	4.5	572	65	965	109	1,206	136
K102_0060 MT10	6.000	6/1	3,300	2,800	4,500	12/6	1.1	30	3.4	523	59	523	59	654	74
K102_0060 MT20	6.000	6/1	3,300	2,800	4,500	12/6	1.7	30	3.4	587	66	985	111	1,231	139
K102_0066 MT10	6.644	299/45	3,600	3,300	5,000	12/6	1.0	31	3.5	570	64	570	64	712	80
K102_0066 MT20	6.644	299/45	3,500	3,300	5,000	12/6	1.6	31	3.5	607	69	1,025	116	1,340	151
K102_0083 MT10	8.309	1911/230	3,600	3,300	5,000	12/6	0.9	33	3.7	654	74	684	77	855	97
K102_0083 MT20	8.309	1911/230	3,500	3,300	5,000	12/6	1.5	33	3.7	654	74	1,104	125	1,611	182
K102_0092 MT10	9.249	1748/189	3,600	3,300	5,000	12/6	0.9	46	5.2	678	76	793	90	991	112
K102_0092 MT20	9.249	1748/189	3,500	3,300	5,000	12/6	1.5	46	5.2	678	76	1,145	129	1,866	211
K102_0100 MT10	10.14	507/50	4,000	3,800	5,500	12/6	0.8	34	3.8	699	79	806	91	1,008	114
K102_0100 MT20	10.14	507/50	3,500	3,500	5,000	12/6	1.4	34	3.8	699	79	1,107	125	1,898	214
K102_0115 MT10	11.57	266/23	3,600	3,300	5,000	12/6	0.8	48	5.4	730	82	952	108	1,190	134
K102_0115 MT20	11.57	266/23	3,500	3,300	5,000	12/6	1.4	48	5.4	730	82	1,196	135	2,126	240
K102_0125 MT10	12.62	429/34	4,000	3,800	5,500	12/6	0.7	34	3.9	751	85	963	109	1,204	136
K102_0125 MT20	12.62	429/34	3,500	3,500	5,000	12/6	1.3	35	3.9	751	85	1,107	125	1,949	220
K102_0140 MT10	14.11	494/35	4,000	3,800	5,500	12/6	0.8	49	5.5	780	88	1,122	127	1,403	158
K102_0140 MT20	14.11	494/35	3,500	3,500	5,000	12/6	1.4	49	5.6	780	88	1,196	135	2,126	240
K102_0165 MT10	16.71	117/7	4,000	4,000	6,000	12/6	0.7	35	4.0	825	93	1,107	125	1,520	172
K102_0165 MT20	16.71	117/7	3,500	3,500	5,000	12/6	1.3	35	4.0	825	93	1,107	125	1,520	172
K102_0175 MT10	17.56	2090/119	4,000	3,800	5,500	12/6	0.7	50	5.6	839	95	1,196	135	1,676	189
K102_0175 MT20	17.56	2090/119	3,500	3,500	5,000	12/6	1.3	50	5.6	839	95	1,196	135	2,126	240
K102_0200 MT10	20.15	403/20	4,000	4,000	6,000	12/6	0.7	35	4.0	878	99	1,107	125	1,763	199
K102_0200 MT20	20.15	403/20	3,500	3,500	5,000	12/6	1.3	35	4.0	878	99	1,107	125	1,763	199
K102_0230 MT10	23.27	1140/49	4,000	4,000	6,000	12/6	0.7	51	5.7	921	104	1,196	135	2,115	239
K102_0230 MT20	23.27	1140/49	3,500	3,500	5,000	12/6	1.3	51	5.7	921	104	1,196	135	2,115	239
K102_0250 MT10	25.22	1261/50	4,000	4,000	6,000	12/6	0.6	36	4.0	851	96	1,021	115	1,701	192
K102_0250 MT20	25.22	1261/50	3,500	3,500	5,000	12/6	1.2	36	4.0	851	96	1,021	115	1,701	192
K102_0280 MT10	28.05	589/21	4,000	4,000	6,000	12/6	0.7	51	5.7	981	111	1,196	135	2,126	240
K102_0280 MT20	28.05	589/21	3,500	3,500	5,000	12/6	1.3	51	5.8	981	111	1,196	135	2,126	240
K102_0340 MT10	33.71	4719/140	4,000	4,000	6,000	12/6	0.6	36	4.0	647	73	776	88	1,293	146
K102_0350 MT10	35.11	3686/105	4,000	4,000	6,000	12/6	0.6	51	5.8	1,057	119	1,196	135	2,126	240
K102_0350 MT20	35.11	3686/105	3,500	3,500	5,000	12/6	1.2	51	5.8	1,057	119	1,196	135	2,126	240
K102_0400 MT10	40.30	403/10	4,000	4,000	6,000	12/6	0.6	36	4.1	544	61	653	74	846	96
K102_0470 MT10	46.92	2299/49	4,000	4,000	6,000	12/6	0.6	51	5.8	900	102	1,080	122	1,800	203
K102_0500 MT10	50.31	5031/100	4,000	4,000	6,000	12/6	0.6	36	4.1	442	50	531	60	885	100
K102_0560 MT10	56.10	1178/21	4,000	4,000	6,000	12/6	0.6	51	5.8	758	86	909	103	1,178	133
K102_0700 MT10	70.03	2451/35	4,000	4,000	6,000	12/6	0.6	51	5.8	616	70	739	83	1,232	139

[1] Backlash shown "STANDARD/REDUCED".

[2] Maximum torque for continuous input RPM - horizontal output position.

[3] Maximum momentary torque for emergency stops or heavy shock load. Admissible stops per life of reducer = 1,000 stops maximum.

[4] dB(A)Measured at 1 meter distance with 3000 RPM input

Index of Symbols

- i ... Exact Ratio = Exact Tooth Count
- J_1 .... Reducer Inertia
- C ... ServoCool
- C_2 ... Torsional Stiffness
- n_{1DBH} ... Maximum Continuous Input RPM Horizontal Mounting - EL1, 2, 5, 6
- n_{1DBV} ... Maximum Continuous Input RPM Vertical Position - EL3 and EL4
- n_{1ZB} ... Maximum Cyclic Input RPM
- M_{2N} ... Nominal Torque @ 2000 RPM Input
- $M_{2N(n1DBH)}$ ... Rated Torque @ Maximum Continuous Input RPM Horizontal Mounting - EL1, EL2, EL5, EL6
- M_{2B} ... Acceleration Torque Maximum
- M_{2PEAK} ... Peak Torque

K

STÖBER

"K" Series–Right Angle Helical/Bevel ServoFit® Modular System Selection Data

Part Number	Reducer Ratio i		Input RPM Maximum Continuous		Input RPM Maximum Cyclic	Backlash arcmins	Input Inertia	Torsional Stiffness per arcmin		Output Torque Nominal [2]		Output Torque Acceleration		Output Torque Peak [3]	
										$M_{2N \le 2000\ RPM}$		M_{2B}		M_{2PEAK}	
	Nom.	Exact	n_{1DBH}	n_{1DBV}	n_{1ZB}	$\Delta\varphi$ [1]	J_1 kgcm²	C_2 in.lbs.	C_2 Nm	in.lbs.	Nm	in.lbs.	Nm	in.lbs.	Nm
K202 with MT TriAdapt® Motor Adapter Continued Next Page														**Noise Level ≤ 53 dB(A)** [4]	
K202_0040 MT10	4.000	4/1	3,000	2,600	4,000	10/5	3.1	33	3.8	393	44	393	44	491	55
K202_0040 MT20	4.000	4/1	3,000	2,600	4,000	10/5	3.7	35	3.9	915	103	1,512	171	2,170	245
K202_0040 MT30	4.000	4/1	3,000	2,600	4,000	10/5	8.5	41	4.7	915	103	1,546	174	2,170	245
K202_0044 MT10	4.364	48/11	3,000	2,600	4,000	10/5	2.7	36	4.1	421	48	421	48	526	59
K202_0044 MT20	4.364	48/11	3,000	2,600	4,000	10/5	3.3	37	4.2	942	106	1,591	180	2,327	263
K202_0044 MT30	4.364	48/11	3,000	2,600	4,000	10/5	8.1	43	4.9	942	106	1,591	180	2,327	263
K202_0052 MT20	5.177	2107/407	3,000	2,600	4,000	10/5	2.9	42	4.7	997	113	1,684	190	2,724	308
K202_0052 MT30	5.177	2107/407	3,000	2,600	4,000	10/5	7.7	47	5.3	997	113	1,684	190	2,724	308
K202_0060 MT10	6.000	6/1	3,000	2,600	4,000	10/5	2.3	51	5.8	579	65	579	65	724	82
K202_0060 MT20	6.000	6/1	3,000	2,600	4,000	10/5	2.9	53	5.9	1,047	118	1,769	200	3,199	361
K202_0060 MT30	6.000	6/1	3,000	2,600	4,000	10/5	7.7	59	6.6	1,047	118	1,769	200	3,199	361
K202_0067 MT10	6.683	2279/341	3,500	3,100	4,500	10/5	1.7	46	5.2	609	69	609	69	761	86
K202_0067 MT20	6.683	2279/341	3,500	3,100	4,500	10/5	2.3	47	5.3	1,086	123	1,834	207	3,364	380
K202_0067 MT30	6.683	2279/341	3,500	3,100	4,000	10/5	7.1	51	5.8	1,086	123	1,834	207	3,364	380
K202_0071 MT20	7.118	2107/296	3,000	2,600	4,000	10/5	2.6	57	6.4	1,109	125	1,873	211	3,543	400
K202_0071 MT30	7.118	2107/296	3,000	2,600	4,000	10/5	7.4	62	7.0	1,109	125	1,873	211	3,543	400
K202_0084 MT10	8.397	2494/297	3,500	3,100	4,500	10/5	1.4	50	5.7	739	83	739	83	924	104
K202_0084 MT20	8.397	2494/297	3,500	3,100	4,500	10/5	2.0	51	5.7	1,171	132	1,949	220	3,543	400
K202_0084 MT30	8.397	2494/297	3,500	3,100	4,000	10/5	6.8	54	6.1	1,171	132	1,949	220	3,543	400
K202_0092 MT10	9.190	2279/248	3,500	3,100	4,500	10/5	1.5	61	6.9	837	95	837	95	1,046	118
K202_0092 MT20	9.190	2279/248	3,500	3,100	4,500	10/5	2.1	62	7.0	1,207	136	1,949	220	3,543	400
K202_0092 MT30	9.190	2279/248	3,500	3,100	4,000	10/5	6.9	66	7.4	1,207	136	1,949	220	3,543	400
K202_0100 MT10	10.07	2881/286	3,900	3,500	5,000	10/5	1.2	52	5.9	855	97	855	97	1,069	121
K202_0100 MT20	10.07	2881/286	3,500	3,500	5,000	10/5	1.8	53	6.0	1,245	141	1,949	220	3,543	400
K202_0100 MT30	10.07	2881/286	3,500	3,500	4,000	10/5	6.6	55	6.2	1,245	141	1,949	220	3,543	400
K202_0115 MT10	11.55	1247/108	3,500	3,100	4,500	10/5	1.3	65	7.3	1,016	115	1,016	115	1,270	143
K202_0115 MT20	11.55	1247/108	3,500	3,100	4,500	10/5	1.9	66	7.4	1,303	147	1,949	220	3,543	400
K202_0115 MT30	11.55	1247/108	3,500	3,100	4,000	10/5	6.7	68	7.7	1,303	147	1,949	220	3,543	400
K202_0125 MT10	12.71	559/44	3,900	3,500	5,000	10/5	1.0	55	6.2	1,037	117	1,037	117	1,297	146
K202_0125 MT20	12.71	559/44	3,500	3,500	5,000	10/5	1.6	55	6.2	1,345	152	1,949	220	3,543	400
K202_0125 MT30	12.71	559/44	3,500	3,500	4,000	10/5	6.4	56	6.4	1,345	152	1,949	220	3,543	400
K202_0140 MT10	13.85	2881/208	3,900	3,500	5,000	10/5	1.1	67	7.6	1,176	133	1,176	133	1,470	166
K202_0140 MT20	13.85	2881/208	3,500	3,500	5,000	10/5	1.7	67	7.6	1,384	156	1,949	220	3,543	400
K202_0140 MT30	13.85	2881/208	3,500	3,500	4,000	10/5	6.5	69	7.8	1,384	156	1,949	220	3,543	400
K202_0170 MT10	16.86	2967/176	4,000	3,900	5,500	10/5	0.9	56	6.4	1,302	147	1,302	147	1,627	184
K202_0170 MT20	16.86	2967/176	3,500	3,500	5,000	10/5	1.5	57	6.4	1,478	167	1,949	220	3,543	400
K202_0170 MT30	16.86	2967/176	3,500	3,500	4,000	10/5	6.3	57	6.5	1,478	167	1,949	220	3,543	400
K202_0175 MT10	17.47	559/32	3,900	3,500	5,000	10/5	1.0	69	7.8	1,426	161	1,426	161	1,783	201
K202_0175 MT20	17.47	559/32	3,500	3,500	5,000	10/5	1.6	69	7.8	1,495	169	1,949	220	3,543	400
K202_0175 MT30	17.47	559/32	3,500	3,500	4,000	10/5	6.4	70	7.9	1,495	169	1,949	220	3,543	400
K202_0200 MT10	20.33	1118/55	4,000	3,900	5,500	10/5	0.8	57	6.4	1,504	170	1,504	170	1,880	212
K202_0200 MT20	20.33	1118/55	3,500	3,500	5,000	10/5	1.4	57	6.5	1,573	178	1,949	220	3,541	400
K202_0200 MT30	20.33	1118/55	3,500	3,500	4,000	10/5	6.2	58	6.5	1,573	178	1,949	220	3,541	400

Motor Shaft

Motor Adapter	Max. Shaft Diameter
MT10	19
MT20	24
MT30	38
MT40	48
MT50	60

Housing Styles

N Foot Mounted

F Round Flange

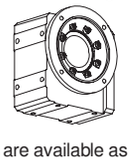

G Tapped Holes

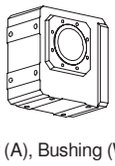

GD Torque Arm Bracket

These Housing Styles are available as Hollow (A), Bushing (W), or Solid (V) Output.

See Page 194 for required ordering information and part number example.

"K" Series–Right Angle Helical/Bevel ServoFit® Modular System Selection Data

STÖBER

Part Number	Reducer Ratio i		Input RPM Maximum Continuous		Input RPM Maximum Cyclic	Backlash arcmins	Input Inertia	Torsional Stiffness per arcmin		Output Torque Nominal [2]		Output Torque Acceleration		Output Torque Peak [3]	
										$M_{2N \le 2000\ RPM}$		M_{2B}		M_{2PEAK}	
	Nom.	Exact	n_{1DBH}	n_{1DBV}	n_{1ZB}	$\Delta\varphi$ [1]	J_1 kgcm²	C_2 in.lbs.	C_2 Nm	in.lbs.	Nm	in.lbs.	Nm	in.lbs.	Nm
K202 with MT TriAdapt® Motor Adapter Continued														**Noise Level ≤ 53 dB(A)** [4]	
K202_0230 MT10	23.18	2967/128	4,000	3,900	5,500	10/5	0.8	70	7.9	1,643	186	1,790	202	2,237	253
K202_0230 MT20	23.18	2967/128	3,500	3,500	5,000	10/5	1.4	70	7.9	1,643	186	1,949	220	3,543	400
K202_0230 MT30	23.18	2967/128	3,500	3,500	4,000	10/5	6.2	71	8.0	1,643	186	1,949	220	3,543	400
K202_0250 MT10	25.13	1935/77	4,000	3,900	5,500	10/5	0.7	58	6.5	1,688	191	1,775	200	2,219	250
K202_0250 MT20	25.13	1935/77	3,500	3,500	5,000	10/5	1.3	58	6.5	1,688	191	1,949	220	3,543	400
K202_0250 MT30	25.13	1935/77	3,500	3,500	4,000	10/5	6.1	58	6.6	1,688	191	1,949	220	3,543	400
K202_0280 MT10	27.95	559/20	4,000	3,900	5,500	10/5	0.8	71	8.0	1,749	197	1,949	220	2,586	292
K202_0280 MT20	27.95	559/20	3,500	3,500	5,000	10/5	1.4	71	8.0	1,749	197	1,949	220	3,543	400
K202_0280 MT30	27.95	559/20	3,500	3,500	4,000	10/5	6.2	71	8.1	1,749	197	1,949	220	3,543	400
K202_0340 MT10	33.62	1849/55	4,000	3,900	5,500	10/5	0.7	58	6.6	1,364	154	1,637	185	2,729	308
K202_0340 MT20	33.62	1849/55	3,500	3,500	5,000	10/5	1.3	58	6.6	1,364	154	1,637	185	2,729	308
K202_0350 MT10	34.55	1935/56	4,000	3,900	5,500	10/5	0.7	71	8.0	1,772	200	1,949	220	3,051	344
K202_0350 MT20	34.55	1935/56	3,500	3,500	5,000	10/5	1.3	71	8.1	1,772	200	1,949	220	3,543	400
K202_0350 MT30	34.55	1935/56	3,500	3,500	4,000	10/5	6.1	72	8.1	1,772	200	1,949	220	3,543	400
K202_0400 MT10	40.39	1333/33	4,000	3,900	5,500	10/5	0.7	58	6.6	1,023	116	1,228	139	1,690	191
K202_0460 MT10	46.23	1849/40	4,000	3,900	5,500	10/5	0.7	72	8.1	1,772	200	1,949	220	3,543	400
K202_0460 MT20	46.23	1849/40	3,500	3,500	5,000	10/5	1.3	72	8.1	1,772	200	1,949	220	3,543	400
K202_0500 MT10	50.49	6665/132	4,000	3,900	5,500	10/5	0.6	58	6.6	853	96	1,023	116	1,705	193
K202_0560 MT10	55.54	1333/24	4,000	3,900	5,500	10/5	0.7	72	8.1	1,407	159	1,688	191	2,323	262
K202_0690 MT10	69.43	6665/96	4,000	3,900	5,500	10/5	0.6	72	8.1	1,172	132	1,407	159	2,345	265
K203 with MT TriAdapt® Motor Adapter														**Noise Level ≤ 53 dB(A)** [4]	
K203_0390 MT10	39.45	135407/3432	4,000	3,900	5,500	10/6	0.7	58	6.6	1,431	162	1,431	162	1,788	202
K203_0450 MT10	45.22	58609/1296	4,000	3,900	5,500	10/6	0.7	72	8.1	1,640	185	1,640	185	2,050	231
K203_0500 MT10	49.76	26273/528	4,000	3,900	5,500	10/6	0.7	58	6.6	1,772	200	1,804	204	2,256	255
K203_0540 MT10	54.25	135407/2496	4,000	3,900	5,500	10/6	0.7	72	8.1	1,772	200	1,949	220	2,459	278
K203_0660 MT10	66.03	46483/704	4,000	3,900	5,500	10/6	0.7	59	6.6	1,772	200	1,949	220	2,993	338
K203_0680 MT10	68.42	26273/384	4,000	3,900	5,500	10/6	0.7	72	8.1	1,772	200	1,949	220	3,101	350
K203_0800 MT10	79.62	26273/330	4,000	3,900	5,500	10/6	0.7	59	6.6	1,772	200	1,949	220	3,540	400
K203_0910 MT10	90.79	46483/512	4,000	3,900	5,500	10/6	0.7	72	8.1	1,772	200	1,949	220	3,543	400
K203_1090 MT10	109.5	26273/240	4,000	3,900	5,500	10/6	0.7	72	8.1	1,772	200	1,949	220	3,543	400
K203_1350 MT10	135.3	30315/224	4,000	3,900	5,500	10/6	0.7	72	8.1	1,772	200	1,949	220	3,543	400
K203_1810 MT10	181.0	86903/480	4,000	3,900	5,500	10/6	0.7	72	8.1	1,772	200	1,949	220	3,543	400
K203_2180 MT10	217.5	62651/288	4,000	3,900	5,500	10/6	0.6	72	8.1	1,407	159	1,688	191	2,323	262
K203_2720 MT10	271.9	313255/1152	4,000	3,900	5,500	10/6	0.6	72	8.1	1,172	132	1,407	159	2,345	265

[1] Backlash shown "STANDARD/REDUCED".

[2] Maximum torque for continuous input RPM - horizontal output position.

[3] Maximum momentary torque for emergency stops or heavy shock load. Admissible stops per life of reducer = 1,000 stops maximum.

[4] dB(A)Measured at 1 meter distance with 3000 RPM input

Index of Symbols

- i ... Exact Ratio = Exact Tooth Count
- J_1 .... Reducer Inertia
- C ... ServoCool
- C_2 ... Torsional Stiffness
- n_{1DBH} ... Maximum Continuous Input RPM Horizontal Mounting - EL1, 2, 5, 6
- n_{1DBV} ... Maximum Continuous Input RPM Vertical Position - EL3 and EL4
- n_{1ZB} ... Maximum Cyclic Input RPM
- M_{2N} ... Nominal Torque @ 2000 RPM Input
- $M_{2N(n1DBH)}$ ... Rated Torque @ Maximum Continuous Input RPM Horizontal Mounting - EL1, EL2, EL5, EL6
- M_{2B} ... Acceleration Torque Maximum
- M_{2PEAK} ... Peak Torque

K

STÖBER

"K" Series–Right Angle Helical/Bevel ServoFit® Modular System Selection Data

Part Number	Reducer Ratio i		Input RPM Maximum Continuous		Input RPM Maximum Cyclic	Backlash arcmins	Input Inertia	Torsional Stiffness per arcmin		Output Torque Nominal [2]		Output Torque Acceleration		Output Torque Peak [3]	
										$M_{2N \le 2000\ RPM}$		M_{2B}		M_{2PEAK}	
	Nom.	Exact	n_{1DBH}	n_{1DBV}	n_{1ZB}	$\Delta\varphi$ [1]	J_1 kgcm²	C_2 in.lbs.	C_2 Nm	in.lbs.	Nm	in.lbs.	Nm	in.lbs.	Nm
K302 with MT TriAdapt® Motor Adapter Continued Next Page														**Noise Level ≤ 53 dB(A)** [4]	
K302_0040 MT20	4.000	4/1	2,700	2,300	3,800	10/4	6.4	40	4.5	1,375	155	1,512	171	2,238	253
K302_0040 MT30	4.000	4/1	2,700	2,300	3,800	10/4	11.2	49	5.5	1,602	181	2,707	306	5,772	652
K302_0044 MT20	4.364	48/11	2,700	2,300	3,800	10/4	5.7	43	4.9	1,500	169	1,650	186	2,421	273
K302_0044 MT30	4.364	48/11	2,700	2,300	3,800	10/4	10.5	52	5.8	1,650	186	2,787	315	6,201	700
K302_0054 MT20	5.375	43/8	2,700	2,300	3,800	10/4	4.5	51	5.7	1,768	200	2,032	229	2,884	326
K302_0054 MT30	5.375	43/8	2,700	2,300	3,800	10/4	9.3	58	6.5	1,768	200	2,307	260	2,884	326
K302_0060 MT20	6.000	6/1	2,700	2,300	3,800	10/4	4.8	59	6.7	1,834	207	2,268	256	3,328	376
K302_0060 MT30	6.000	6/1	2,700	2,300	3,800	10/4	9.6	67	7.6	1,834	207	3,099	350	6,201	700
K302_0067 MT20	6.740	2150/319	3,200	2,800	4,200	10/4	3.5	57	6.5	1,907	215	2,548	288	3,515	397
K302_0067 MT30	6.740	2150/319	3,200	2,800	4,000	10/4	8.3	63	7.1	1,907	215	2,812	317	3,515	397
K302_0074 MT20	7.391	473/64	2,700	2,300	3,800	10/4	3.9	66	7.5	1,966	222	2,794	315	3,965	448
K302_0074 MT30	7.391	473/64	2,700	2,300	3,800	10/4	8.7	73	8.2	1,966	222	3,172	358	3,965	448
K302_0084 MT20	8.444	2322/275	3,200	2,800	4,200	10/4	2.8	63	7.1	2,056	232	3,192	360	4,244	479
K302_0084 MT30	8.444	2322/275	3,200	2,800	4,000	10/4	7.6	67	7.5	2,056	232	3,395	383	4,244	479
K302_0093 MT20	9.267	1075/116	3,200	2,800	4,200	10/4	3.2	72	8.2	2,120	239	3,410	385	4,833	546
K302_0093 MT30	9.267	1075/116	3,200	2,800	4,000	10/4	8.0	77	8.7	2,120	239	3,410	385	4,833	546
K302_0100 MT20	10.14	3010/297	3,500	3,100	5,000	10/4	2.4	66	7.4	2,185	247	3,410	385	4,911	554
K302_0100 MT30	10.14	3010/297	3,500	3,100	4,000	10/4	7.2	69	7.8	2,185	247	3,410	385	4,911	554
K302_0115 MT20	11.61	1161/100	3,200	2,800	4,200	10/4	2.6	77	8.6	2,286	258	3,410	385	5,835	659
K302_0115 MT30	11.61	1161/100	3,200	2,800	4,000	10/4	7.4	80	9.0	2,286	258	3,410	385	5,835	659
K302_0125 MT10	12.58	3182/253	3,500	3,100	5,000	10/4	1.5	68	7.7	1,059	120	1,059	120	1,324	150
K302_0125 MT20	12.58	3182/253	3,500	3,100	5,000	10/4	2.1	69	7.8	2,348	265	3,410	385	5,854	661
K302_0125 MT30	12.58	3182/253	3,500	3,100	4,000	10/4	6.9	71	8.0	2,348	265	3,410	385	5,854	661
K302_0140 MT20	13.94	1505/108	3,500	3,100	5,000	10/4	2.3	79	8.9	2,429	274	3,410	385	6,201	700
K302_0140 MT30	13.94	1505/108	3,500	3,100	4,000	10/4	7.1	81	9.2	2,429	274	3,410	385	6,201	700
K302_0170 MT10	16.94	559/33	3,800	3,500	5,000	10/4	1.1	71	8.0	1,342	152	1,342	152	1,678	189
K302_0170 MT20	16.94	559/33	3,500	3,500	5,000	10/4	1.7	71	8.1	2,592	293	3,410	385	6,201	700
K302_0170 MT30	16.94	559/33	3,500	3,500	4,000	10/4	6.5	73	8.2	2,592	293	3,410	385	6,201	700
K302_0175 MT10	17.29	1591/92	3,500	3,100	5,000	10/4	1.4	81	9.1	1,457	164	1,457	164	1,821	206
K302_0175 MT20	17.29	1591/92	3,500	3,100	5,000	10/4	2.0	81	9.2	2,610	295	3,410	385	6,201	700
K302_0175 MT30	17.29	1591/92	3,500	3,100	4,000	10/4	6.8	83	9.4	2,610	295	3,410	385	6,201	700
K302_0200 MT10	20.28	3569/176	3,800	3,500	5,000	10/4	1.0	72	8.1	1,555	176	1,555	176	1,943	219
K302_0200 MT20	20.28	3569/176	3,500	3,500	5,000	10/4	1.6	72	8.2	2,753	311	3,410	385	6,201	700
K302_0200 MT30	20.28	3569/176	3,500	3,500	4,000	10/4	6.4	73	8.3	2,753	311	3,410	385	6,201	700
K302_0230 MT10	23.29	559/24	3,800	3,500	5,000	10/4	1.1	83	9.4	1,845	208	1,845	208	2,307	260
K302_0230 MT20	23.29	559/24	3,500	3,500	5,000	10/4	1.7	83	9.4	2,883	325	3,410	385	6,201	700
K302_0230 MT30	23.29	559/24	3,500	3,500	4,000	10/4	6.5	84	9.5	2,883	325	3,410	385	6,201	700
K302_0250 MT10	25.26	3612/143	3,800	3,500	5,000	10/4	0.9	73	8.2	1,839	208	1,839	208	2,298	259
K302_0250 MT20	25.26	3612/143	3,500	3,500	5,000	10/4	1.5	73	8.3	2,962	334	3,410	385	4,328	489
K302_0250 MT30	25.26	3612/143	3,500	3,500	4,000	10/4	6.3	74	8.3	2,962	334	3,410	385	4,328	489
K302_0280 MT10	27.88	3569/128	3,800	3,500	5,000	10/4	1.0	84	9.4	2,138	241	2,138	241	2,672	302
K302_0280 MT20	27.88	3569/128	3,500	3,500	5,000	10/4	1.6	84	9.5	3,061	346	3,410	385	6,201	700
K302_0280 MT30	27.88	3569/128	3,500	3,500	4,000	10/4	6.4	85	9.5	3,061	346	3,410	385	6,201	700

Motor Shaft

Motor Adapter	Max. Shaft Diameter
MT10	19
MT20	24
MT30	38
MT40	48
MT50	60

Housing Styles

N Foot Mounted

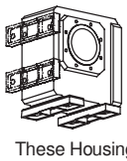

F Round Flange

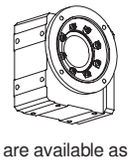

G Tapped Holes

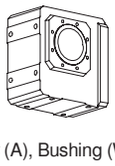

GD Torque Arm Bracket

These Housing Styles are available as Hollow (A), Bushing (W), or Solid (V) Output.

See Page 194 for required ordering information and part number example.

"K" Series–Right Angle Helical/Bevel ServoFit® Modular System Selection Data

STÖBER

Part Number	Reducer Ratio i		Input RPM Maximum Continuous n_{1DBH}	Input RPM Maximum Continuous n_{1DBV}	Input RPM Maximum Cyclic n_{1ZB}	Backlash arcmins $\Delta\varphi$ [1]	Input Inertia J_1	Torsional Stiffness per arcmin C_2		Output Torque Nominal [2] $M_{2N \le 2000\ RPM}$		Output Torque Acceleration M_{2B}		Output Torque Peak [3] M_{2PEAK}	
	Nom.	Exact					$kgcm^2$	in.lbs.	Nm	in.lbs.	Nm	in.lbs.	Nm	in.lbs.	Nm
K302 with MT TriAdapt® Motor Adapter Continued														**Noise Level ≤ 53 dB(A)** [4]	
K302_0340 MT10	33.62	1849/55	3,800	3,500	5,000	10/4	0.8	74	8.3	2,217	250	2,299	260	2,874	324
K302_0340 MT20	33.62	1849/55	3,500	3,500	5,000	10/4	1.4	74	8.3	2,217	250	2,660	300	4,434	501
K302_0340 MT30	33.62	1849/55	3,500	3,500	4,000	10/4	6.2	74	8.4	2,217	250	2,660	300	4,434	501
K302_0350 MT10	34.73	903/26	3,800	3,500	5,000	10/4	0.9	84	9.5	2,528	285	2,528	285	3,160	357
K302_0350 MT20	34.73	903/26	3,500	3,500	5,000	10/4	1.5	84	9.5	3,100	350	3,410	385	5,951	672
K302_0350 MT30	34.73	903/26	3,500	3,500	4,000	10/4	6.3	85	9.6	3,100	350	3,410	385	5,951	672
K302_0410 MT10	40.51	4902/121	3,800	3,500	5,000	10/4	0.7	74	8.4	1,705	193	2,046	231	3,334	376
K302_0410 MT20	40.51	4902/121	3,500	3,500	5,000	10/4	1.3	74	8.4	1,705	193	2,046	231	3,334	376
K302_0460 MT10	46.23	1849/40	3,800	3,500	5,000	10/4	0.8	85	9.6	3,048	344	3,162	357	3,952	446
K302_0460 MT20	46.23	1849/40	3,500	3,500	5,000	10/4	1.4	85	9.6	3,048	344	3,410	385	6,097	688
K302_0460 MT30	46.23	1849/40	3,500	3,500	4,000	10/4	6.2	85	9.6	3,048	344	3,410	385	6,097	688
K302_0500 MT10	50.49	6665/132	3,800	3,500	5,000	10/4	0.7	74	8.4	1,364	154	1,637	185	2,072	234
K302_0560 MT10	55.71	2451/44	3,800	3,500	5,000	10/4	0.7	85	9.6	2,345	265	2,814	318	4,584	517
K302_0560 MT20	55.71	2451/44	3,500	3,500	5,000	10/4	1.3	85	9.6	2,345	265	2,814	318	4,584	517
K302_0690 MT10	69.43	6665/96	3,800	3,500	5,000	10/4	0.7	85	9.6	1,876	212	2,251	254	2,849	322
K303 with MT TriAdapt® Motor Adapter														**Noise Level ≤ 53 dB(A)** [4]	
K303_0330 MT20	32.65	44892/1375	3,500	3,500	5,000	10/5	1.5	74	8.3	3,100	350	3,394	383	4,243	479
K303_0360 MT20	35.83	215/6	3,500	3,500	5,000	10/5	1.5	85	9.5	3,100	350	3,410	385	4,833	546
K303_0390 MT20	39.19	34916/891	3,500	3,500	5,000	10/5	1.4	74	8.4	3,100	350	3,410	385	4,910	554
K303_0450 MT20	44.89	11223/250	3,500	3,500	5,000	10/5	1.4	85	9.6	3,100	350	3,410	385	5,834	659
K303_0490 MT10	49.26	74777/1518	3,800	3,500	5,000	10/5	0.7	74	8.4	1,786	202	1,786	202	2,233	252
K303_0490 MT20	48.63	184556/3795	3,500	3,500	5,000	10/5	1.4	74	8.4	3,100	350	3,410	385	5,854	661
K303_0540 MT20	53.88	8729/162	3,500	3,500	5,000	10/5	1.4	85	9.6	3,100	350	3,410	385	6,201	700
K303_0550 MT10	54.58	70735/1296	3,800	3,500	5,000	10/5	0.7	85	9.6	1,979	223	1,979	223	2,474	279
K303_0650 MT20	65.50	32422/495	3,500	3,500	5,000	10/5	1.4	75	8.4	3,100	350	3,410	385	6,201	700
K303_0660 MT10	66.35	26273/396	3,800	3,500	5,000	10/5	0.7	75	8.4	2,406	272	2,406	272	3,007	340
K303_0670 MT20	66.87	46139/690	3,500	3,500	5,000	10/5	1.4	85	9.6	3,100	350	3,410	385	6,201	700
K303_0680 MT10	67.73	74777/1104	3,800	3,500	5,000	10/5	0.7	85	9.6	2,456	277	2,456	277	3,070	347
K303_0780 MT20	78.41	103501/1320	3,500	3,500	5,000	10/5	1.4	75	8.4	3,100	350	3,410	385	6,201	700
K303_0790 MT10	79.42	167743/2112	3,800	3,500	5,000	10/5	0.7	75	8.4	2,832	320	2,880	325	3,600	406
K303_0900 MT20	90.06	16211/180	3,500	3,500	5,000	10/5	1.4	85	9.6	3,100	350	3,410	385	6,201	700
K303_0910 MT10	91.23	26273/288	3,800	3,500	5,000	10/5	0.7	85	9.6	3,100	350	3,308	373	4,135	467
K303_1080 MT20	107.8	103501/960	3,500	3,500	5,000	10/5	1.4	85	9.6	3,100	350	3,410	385	6,201	700
K303_1090 MT10	109.2	167743/1536	3,800	3,500	5,000	10/5	0.7	85	9.6	3,100	350	3,410	385	4,950	559
K303_1340 MT20	134.3	8729/65	3,500	3,500	5,000	10/5	1.4	85	9.7	3,100	350	3,410	385	5,950	672
K303_1360 MT10	136.0	14147/104	3,800	3,500	5,000	10/5	0.7	85	9.7	3,100	350	3,410	385	5,950	672
K303_1790 MT20	178.7	53621/300	3,500	3,500	5,000	10/5	1.4	86	9.7	3,048	344	3,410	385	6,097	688
K303_1810 MT10	181.0	86903/480	3,800	3,500	5,000	10/5	0.7	86	9.7	3,048	344	3,410	385	6,097	688
K303_2180 MT10	218.2	38399/176	3,800	3,500	5,000	10/5	0.7	86	9.7	2,345	265	2,814	318	4,583	517
K303_2720 MT10	271.9	313255/1152	3,800	3,500	5,000	10/5	0.7	86	9.7	1,876	212	2,251	254	2,849	322

[1] Backlash shown "STANDARD/REDUCED".

[2] Maximum torque for continuous input RPM - horizontal output position.

[3] Maximum momentary torque for emergency stops or heavy shock load. Admissible stops per life of reducer = 1,000 stops maximum.

[4] dB(A)Measured at 1 meter distance with 3000 RPM input

Index of Symbols

- i ... Exact Ratio = Exact Tooth Count
- J_1 .... Reducer Inertia
- C ... ServoCool
- C_2 ... Torsional Stiffness
- n_{1DBH} ... Maximum Continuous Input RPM Horizontal Mounting - EL1, 2, 5, 6
- n_{1DBV} ... Maximum Continuous Input RPM Vertical Position - EL3 and EL4
- n_{1ZB} ... Maximum Cyclic Input RPM
- M_{2N} ... Nominal Torque @ 2000 RPM Input
- $M_{2N(n1DBH)}$ ... Rated Torque @ Maximum Continuous Input RPM Horizontal Mounting - EL1, EL2, EL5, EL6
- M_{2B} ... Acceleration Torque Maximum
- M_{2PEAK} ... Peak Torque

K

"K" Series–Right Angle Helical/Bevel ServoFit® Modular System Selection Data

Part Number	Reducer Ratio i		Input RPM Maximum Continuous		Input RPM Maximum Cyclic	Backlash arcmins	Input Inertia	Torsional Stiffness per arcmin		Output Torque Nominal [2]		Output Torque Acceleration		Output Torque Peak [3]	
										$M_{2N \le 2000\ RPM}$		M_{2B}		M_{2PEAK}	
	Nom.	Exact	n_{1DBH}	n_{1DBV}	n_{1ZB}	$\Delta\varphi$ [1]	J_1 kgcm²	C_2 in.lbs.	C_2 Nm	in.lbs.	Nm	in.lbs.	Nm	in.lbs.	Nm
K402 with MT TriAdapt® Motor Adapter Continued Next Page														**Noise Level ≤ 51 dB(A)** [4]	
K402_0040 MT20	4.000	4/1	2,600	2,200	3,500	10/4	11.4	55	6.2	1,375	155	1,512	171	2,311	261
K402_0040 MT30	4.000	4/1	2,600	2,200	3,500	10/4	16.2	72	8.2	2,405	271	3,592	405	5,960	673
K402_0040 MT40	4.000	4/1	2,600	2,200	3,500	10/4	20.2	99	11.2	2,405	271	4,062	459	5,960	673
K402_0044 MT20	4.364	48/11	2,600	2,200	3,500	10/4	10.1	61	6.9	1,500	169	1,650	186	2,503	283
K402_0044 MT30	4.364	48/11	2,600	2,200	3,500	10/4	14.9	79	8.9	2,475	279	3,918	442	6,456	729
K402_0044 MT40	4.364	48/11	2,600	2,200	3,500	10/4	18.9	105	11.8	2,475	279	4,182	472	6,456	729
K402_0054 MT20	5.422	1849/341	2,600	2,200	3,500	10/4	7.5	77	8.7	1,863	210	2,050	231	3,021	341
K402_0054 MT30	5.422	1849/341	2,600	2,200	3,500	10/4	12.3	95	10.7	2,661	300	4,496	508	7,791	880
K402_0054 MT40	5.422	1849/341	2,600	2,200	3,500	10/4	16.3	117	13.2	2,661	300	4,496	508	7,791	880
K402_0060 MT20	6.000	6/1	2,600	2,200	3,500	10/4	8.4	92	10.4	2,062	233	2,268	256	3,442	389
K402_0060 MT30	6.000	6/1	2,600	2,200	3,500	10/4	13.2	113	12.8	2,752	311	4,650	525	8,877	1,002
K402_0060 MT40	6.000	6/1	2,600	2,200	3,500	10/4	17.2	139	15.7	2,752	311	4,650	525	8,877	1,002
K402_0067 MT20	6.719	215/32	3,000	2,600	4,000	10/4	5.6	93	10.5	2,309	261	2,540	287	3,605	407
K402_0067 MT30	6.719	215/32	3,000	2,600	4,000	10/4	10.4	108	12.2	2,858	323	4,829	545	9,298	1,050
K402_0067 MT40	6.719	215/32	3,000	2,600	3,500	10/4	14.4	127	14.3	2,858	323	4,829	545	9,298	1,050
K402_0075 MT20	7.456	1849/248	2,600	2,200	3,500	10/4	6.4	111	12.5	2,563	289	2,819	318	4,154	469
K402_0075 MT30	7.456	1849/248	2,600	2,200	3,500	10/4	11.2	129	14.6	2,959	334	4,999	564	9,744	1,100
K402_0075 MT40	7.456	1849/248	2,600	2,200	3,500	10/4	15.2	150	17.0	2,959	334	4,999	564	9,744	1,100
K402_0084 MT20	8.377	645/77	3,000	2,600	4,000	10/4	4.3	107	12.1	2,879	325	3,167	358	4,347	491
K402_0084 MT30	8.377	645/77	3,000	2,600	4,000	10/4	9.1	120	13.6	3,076	347	5,197	587	9,744	1,100
K402_0084 MT40	8.377	645/77	3,000	2,600	3,500	10/4	13.1	134	15.1	3,076	347	5,197	587	9,744	1,100
K402_0092 MT20	9.238	2365/256	3,000	2,600	4,000	10/4	4.9	128	14.4	3,175	358	3,493	394	4,956	560
K402_0092 MT30	9.238	2365/256	3,000	2,600	4,000	10/4	9.7	143	16.1	3,178	359	5,315	600	9,744	1,100
K402_0092 MT40	9.238	2365/256	3,000	2,600	3,500	10/4	13.7	159	17.9	3,178	359	5,315	600	9,744	1,100
K402_0100 MT20	10.10	1333/132	3,400	3,000	4,500	10/4	3.5	118	13.3	3,274	370	3,818	431	5,042	569
K402_0100 MT30	10.10	1333/132	3,400	3,000	4,000	10/4	8.3	128	14.5	3,274	370	5,315	600	9,744	1,100
K402_0100 MT40	10.10	1333/132	3,000	3,000	3,500	10/4	12.3	138	15.6	3,274	370	5,315	600	9,744	1,100
K402_0115 MT20	11.52	645/56	3,000	2,600	4,000	10/4	3.9	141	16.0	3,421	386	4,354	492	5,977	675
K402_0115 MT30	11.52	645/56	3,000	2,600	4,000	10/4	8.7	153	17.3	3,421	386	5,315	600	9,744	1,100
K402_0115 MT40	11.52	645/56	3,000	2,600	3,500	10/4	12.7	164	18.6	3,421	386	5,315	600	9,744	1,100
K402_0125 MT20	12.66	2924/231	3,400	3,000	4,500	10/4	2.8	127	14.4	3,530	399	4,785	540	6,113	690
K402_0125 MT30	12.66	2924/231	3,400	3,000	4,000	10/4	7.6	135	15.2	3,530	399	5,315	600	9,744	1,100
K402_0125 MT40	12.66	2924/231	3,000	3,000	3,500	10/4	11.6	142	16.1	3,530	399	5,315	600	9,744	1,100
K402_0140 MT20	13.89	1333/96	3,400	3,000	4,500	10/4	3.2	151	17.0	3,641	411	5,249	593	6,933	783
K402_0140 MT30	13.89	1333/96	3,400	3,000	4,000	10/4	8.0	160	18.0	3,641	411	5,315	600	9,744	1,100
K402_0140 MT40	13.89	1333/96	3,000	3,000	3,500	10/4	12.0	168	19.0	3,641	411	5,315	600	9,744	1,100
K402_0170 MT20	16.94	559/33	3,500	3,300	5,000	10/4	2.2	136	15.4	3,827	432	5,315	600	7,682	867
K402_0170 MT30	16.94	559/33	3,500	3,300	4,000	10/4	7.0	141	15.9	3,890	439	5,315	600	9,744	1,100
K402_0170 MT40	16.94	559/33	3,000	3,000	3,500	10/4	11.0	145	16.4	3,890	439	5,315	600	9,744	1,100
K402_0175 MT20	17.41	731/42	3,400	3,000	4,500	10/4	2.6	159	18.0	3,926	443	5,315	600	8,405	949
K402_0175 MT30	17.41	731/42	3,400	3,000	4,000	10/4	7.4	165	18.7	3,926	443	5,315	600	9,744	1,100
K402_0175 MT40	17.41	731/42	3,000	3,000	3,500	10/4	11.4	171	19.3	3,926	443	5,315	600	9,744	1,100

Motor Shaft

Motor Adapter	Max. Shaft Diameter
MT10	19
MT20	24
MT30	38
MT40	48
MT50	60

Housing Styles

N Foot Mounted

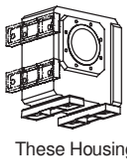

F Round Flange

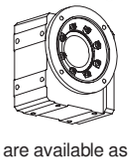

G Tapped Holes

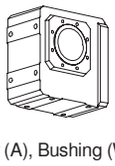

GD Torque Arm Bracket

These Housing Styles are available as Hollow (A), Bushing (W), or Solid (V) Output.

See Page 194 for required ordering information and part number example.

"K" Series–Right Angle Helical/Bevel ServoFit® Modular System Selection Data

STÖBER

Part Number	Reducer Ratio i		Input RPM Maximum Continuous		Input RPM Maximum Cyclic	Backlash arcmins	Input Inertia	Torsional Stiffness per arcmin		Output Torque Nominal 2)		Output Torque Acceleration		Output Torque Peak 3)	
							J_1	C_2		$M_{2N \le 2000\ RPM}$		M_{2B}		M_{2PEAK}	
	Nom.	Exact	n_{1DBH}	n_{1DBV}	n_{1ZB}	$\Delta\varphi$ 1)	kgcm²	in.lbs.	Nm	in.lbs.	Nm	in.lbs.	Nm	in.lbs.	Nm
K402 with MT TriAdapt® Motor Adapter Continued													**Noise Level ≤ 51 dB(A)** 4)		
K402_0200 MT20	20.20	1333/66	3,500	3,300	5,000	10/4	1.9	140	15.8	3,964	447	5,315	600	8,842	998
K402_0200 MT30	20.20	1333/66	3,500	3,300	4,000	10/4	6.7	143	16.2	4,125	466	5,315	600	8,842	998
K402_0200 MT40	20.20	1333/66	3,000	3,000	3,500	10/4	10.7	147	16.5	4,125	466	5,315	600	8,842	998
K402_0230 MT20	23.29	559/24	3,500	3,300	5,000	10/4	2.1	166	18.8	4,326	488	5,315	600	9,744	1,100
K402_0230 MT30	23.29	559/24	3,500	3,300	4,000	10/4	6.9	170	19.2	4,326	488	5,315	600	9,744	1,100
K402_0230 MT40	23.29	559/24	3,000	3,000	3,500	10/4	10.9	173	19.6	4,326	488	5,315	600	9,744	1,100
K402_0250 MT20	25.28	4171/165	3,500	3,300	5,000	10/4	1.7	143	16.2	4,079	460	5,315	600	8,868	1,001
K402_0250 MT30	25.28	4171/165	3,500	3,300	4,000	10/4	6.5	146	16.4	4,434	501	5,315	600	8,868	1,001
K402_0250 MT40	25.28	4171/165	3,000	3,000	3,500	10/4	10.5	148	16.7	4,434	501	5,315	600	8,868	1,001
K402_0280 MT20	27.77	1333/48	3,500	3,300	5,000	10/4	1.9	169	19.1	4,587	518	5,315	600	9,744	1,100
K402_0280 MT30	27.77	1333/48	3,500	3,300	4,000	10/4	6.7	172	19.4	4,587	518	5,315	600	9,744	1,100
K402_0280 MT40	27.77	1333/48	3,000	3,000	3,500	10/4	10.7	174	19.7	4,587	518	5,315	600	9,744	1,100
K402_0340 MT20	33.68	4816/143	3,500	3,300	5,000	10/4	1.5	146	16.5	3,445	389	4,134	467	5,620	634
K402_0340 MT30	33.68	4816/143	3,500	3,300	4,000	10/4	6.3	147	16.6	3,445	389	4,134	467	5,620	634
K402_0350 MT20	34.76	4171/120	3,500	3,300	5,000	10/4	1.7	172	19.4	4,872	550	5,315	600	9,744	1,100
K402_0350 MT30	34.76	4171/120	3,500	3,300	4,000	10/4	6.5	173	19.6	4,872	550	5,315	600	9,744	1,100
K402_0350 MT40	34.76	4171/120	3,000	3,000	3,500	10/4	10.5	175	19.7	4,872	550	5,315	600	9,744	1,100
K402_0410 MT20	40.51	4902/121	3,500	3,300	5,000	10/4	1.4	147	16.6	2,729	308	3,274	370	5,457	616
K402_0410 MT30	40.51	4902/121	3,500	3,300	4,000	10/4	6.2	148	16.7	2,729	308	3,274	370	5,457	616
K402_0460 MT20	46.31	602/13	3,500	3,300	5,000	10/4	1.5	174	19.6	4,737	535	5,315	600	7,728	872
K402_0460 MT30	46.31	602/13	3,500	3,300	4,000	10/4	6.3	175	19.7	4,737	535	5,315	600	7,728	872
K402_0500 MT20	50.43	5547/110	3,500	3,300	5,000	10/4	1.4	148	16.7	2,387	270	2,865	323	4,064	459
K402_0560 MT20	55.71	2451/44	3,500	3,300	5,000	10/4	1.4	174	19.7	3,752	424	4,502	508	7,504	847
K402_0560 MT30	55.71	2451/44	3,500	3,300	4,000	10/4	6.2	175	19.8	3,752	424	4,502	508	7,504	847
K402_0690 MT20	69.34	5547/80	3,500	3,300	5,000	10/4	1.3	175	19.8	3,283	371	3,939	445	5,588	631
K403 with MT TriAdapt® Motor Adapter Continued Next Page													**Noise Level ≤ 51 dB(A)** 4)		
K403_0320 MT20	32.39	2494/77	3,500	3,300	5,000	10/5	1.6	146	16.4	3,477	393	3,477	393	4,346	491
K403_0360 MT20	35.72	13717/384	3,500	3,300	5,000	10/5	1.6	172	19.4	3,965	448	3,965	448	4,956	560
K403_0390 MT20	39.05	38657/990	3,500	3,300	5,000	10/5	1.5	147	16.6	4,033	455	4,033	455	5,042	569
K403_0450 MT20	44.54	1247/28	3,500	3,300	5,000	10/5	1.5	173	19.6	4,781	540	4,781	540	5,976	675
K403_0490 MT20	48.94	169592/3465	3,500	3,300	5,000	10/5	1.5	148	16.7	4,872	550	4,890	552	6,112	690
K403_0540 MT20	53.69	38657/720	3,500	3,300	5,000	10/5	1.5	174	19.7	4,872	550	5,315	600	6,932	783
K403_0650 MT20	65.50	32422/495	3,500	3,300	5,000	10/5	1.4	148	16.8	4,872	550	5,315	600	7,681	867
K403_0660 MT10	66.35	26273/396	3,600	3,300	5,000	10/5	0.7	148	16.8	2,406	272	2,406	272	3,007	340
K403_0670 MT20	67.30	21199/315	3,500	3,300	5,000	10/5	1.4	175	19.8	4,872	550	5,315	600	8,404	949
K403_0680 MT10	68.17	34357/504	3,600	3,300	5,000	10/5	0.7	175	19.7	2,472	279	2,472	279	3,090	349
K403_0780 MT20	78.10	38657/495	3,500	3,300	5,000	10/5	1.4	149	16.8	4,872	550	5,315	600	8,842	998
K403_0790 MT10	79.11	62651/792	3,600	3,300	5,000	10/5	0.7	149	16.8	2,869	324	2,869	324	3,586	405
K403_0900 MT20	90.06	16211/180	3,500	3,300	5,000	10/5	1.4	176	19.8	4,872	550	5,315	600	9,744	1,100
K403_0910 MT10	91.23	26273/288	3,600	3,300	5,000	10/5	0.7	176	19.8	3,308	373	3,308	373	4,135	467
K403_1070 MT20	107.4	38657/360	3,500	3,300	5,000	10/5	1.4	176	19.8	4,872	550	5,315	600	9,744	1,100

1) Backlash shown "STANDARD/REDUCED".

2) Maximum torque for continuous input RPM - horizontal output position.

3) Maximum momentary torque for emergency stops or heavy shock load. Admissible stops per life of reducer = 1,000 stops maximum.

4) dB(A)Measured at 1 meter distance with 3000 RPM input

Index of Symbols

- i ... Exact Ratio = Exact Tooth Count
- J_1 .... Reducer Inertia
- C ... ServoCool
- C_2 ... Torsional Stiffness
- n_{1DBH} ... Maximum Continuous Input RPM Horizontal Mounting - EL1, 2, 5, 6
- n_{1DBV} ... Maximum Continuous Input RPM Vertical Position - EL3 and EL4
- n_{1ZB} ... Maximum Cyclic Input RPM
- M_{2N} ... Nominal Torque @ 2000 RPM Input
- $M_{2N(n1DBH)}$ ... Rated Torque @ Maximum Continuous Input RPM Horizontal Mounting - EL1, EL2, EL5, EL6
- M_{2B} ... Acceleration Torque Maximum
- M_{2PEAK} ... Peak Torque

K

See web site for drawings.

STÖBER

"K" Series–Right Angle Helical/Bevel ServoFit® Modular System Selection Data

Part Number	Reducer Ratio i		Input RPM Maximum Continuous		Input RPM Maximum Cyclic	Backlash arcmins	Input Inertia	Torsional Stiffness per arcmin		Output Torque Nominal [2]		Output Torque Acceleration		Output Torque Peak [3]	
										$M_{2N \le 2000\ RPM}$		M_{2B}		M_{2PEAK}	
	Nom.	Exact	n_{1DBH}	n_{1DBV}	n_{1ZB}	$\Delta\varphi$ [1]	J_1 kgcm²	C_2 in.lbs.	C_2 Nm	in.lbs.	Nm	in.lbs.	Nm	in.lbs.	Nm
K403 with MT TriAdapt® Motor Adapter Continued														**Noise Level ≤ 51 dB(A)** [4]	
K403_1090 MT10	108.8	62651/576	3,600	3,300	5,000	10/5	0.7	176	19.8	3,944	445	3,944	445	4,930	557
K403_1340 MT20	134.4	120959/900	3,500	3,300	5,000	10/5	1.4	176	19.9	4,872	550	5,315	600	9,744	1,100
K403_1360 MT10	136.1	196037/1440	3,600	3,300	5,000	10/5	0.7	176	19.9	4,581	517	4,937	557	6,171	697
K403_1790 MT20	179.1	34916/195	3,500	3,300	5,000	10/5	1.4	176	19.9	4,737	535	5,315	600	7,727	872
K403_1810 MT10	181.4	14147/78	3,600	3,300	5,000	10/5	0.7	176	19.9	4,737	535	5,315	600	7,727	872
K403_2150 MT20	215.4	23693/110	3,500	3,300	5,000	10/5	1.4	176	19.9	3,752	424	4,502	508	7,504	847
K403_2180 MT10	218.2	38399/176	3,600	3,300	5,000	10/5	0.7	176	19.9	3,752	424	4,502	508	7,504	847
K403_2720 MT10	271.6	86903/320	3,600	3,300	5,000	10/5	0.7	176	19.9	3,283	371	3,939	445	5,587	631
K513 with MT TriAdapt® Motor Adapter Continued Next Page														**Noise Level ≤ 61 dB(A)** [4]	
K513_0073 MT30	7.347	551/75	1,900	1,800	3,000	10/5	23.1	172	19.4	5,461	617	6,502	734	11,147	1,258
K513_0073 MT40	7.347	551/75	1,900	1,800	3,000	10/5	27.1	213	24.0	5,461	617	8,858	1,000	11,147	1,258
K513_0081 MT30	8.134	17081/2100	1,900	1,800	3,000	10/5	21.2	185	20.8	5,649	638	7,198	813	12,341	1,393
K513_0081 MT40	8.134	17081/2100	1,900	1,800	3,000	10/5	25.2	222	25.0	5,649	638	8,858	1,000	12,341	1,393
K513_0092 MT30	9.168	1421/155	1,900	1,800	3,000	10/5	18.2	198	22.3	5,879	664	8,113	916	13,494	1,523
K513_0092 MT40	9.168	1421/155	1,900	1,800	3,000	10/5	22.2	230	26.0	5,879	664	8,858	1,000	13,494	1,523
K513_0100 MT30	10.15	203/20	1,900	1,800	3,000	10/5	17.0	208	23.5	6,082	687	8,858	1,000	14,939	1,686
K513_0100 MT40	10.15	203/20	1,900	1,800	3,000	10/5	21.0	237	26.7	6,082	687	8,858	1,000	14,939	1,686
K513_0115 MT30	11.57	10759/930	2,300	2,200	3,600	10/5	14.5	220	24.8	6,353	717	8,858	1,000	15,944	1,800
K513_0115 MT40	11.57	10759/930	2,300	2,200	3,500	10/5	18.5	244	27.5	6,353	717	8,858	1,000	15,944	1,800
K513_0130 MT30	12.81	1537/120	2,300	2,200	3,600	10/5	13.7	228	25.7	6,573	742	8,858	1,000	15,944	1,800
K513_0130 MT40	12.81	1537/120	2,300	2,200	3,500	10/5	17.7	248	28.0	6,573	742	8,858	1,000	15,944	1,800
K513_0145 MT20	14.54	5887/405	2,300	2,200	3,600	10/5	7.2	219	24.7	4,924	556	5,416	611	7,682	867
K513_0145 MT30	14.54	5887/405	2,300	2,200	3,600	10/5	12.0	236	26.6	6,856	774	8,858	1,000	15,944	1,800
K513_0145 MT40	14.54	5887/405	2,300	2,200	3,500	10/5	16.0	253	28.6	6,856	774	8,858	1,000	15,944	1,800
K513_0160 MT20	16.09	26071/1620	2,300	2,200	3,600	10/5	6.7	227	25.6	5,451	615	5,996	677	8,505	960
K513_0160 MT30	16.09	26071/1620	2,300	2,200	3,600	10/5	11.5	242	27.3	7,092	801	8,858	1,000	15,944	1,800
K513_0160 MT40	16.09	26071/1620	2,300	2,200	3,500	10/5	15.5	256	28.9	7,092	801	8,858	1,000	15,944	1,800
K513_0175 MT20	17.48	6293/360	2,800	2,500	4,000	10/5	5.8	232	26.2	5,921	668	6,513	735	8,970	1,013
K513_0175 MT30	17.48	6293/360	2,800	2,500	4,000	10/5	10.6	246	27.7	7,291	823	8,858	1,000	15,944	1,800
K513_0175 MT40	17.48	6293/360	2,800	2,500	3,500	10/5	14.6	258	29.1	7,291	823	8,858	1,000	15,944	1,800
K513_0195 MT20	19.35	27869/1440	2,800	2,500	4,000	10/5	5.4	239	26.9	6,555	740	7,211	814	9,931	1,121
K513_0195 MT30	19.35	27869/1440	2,800	2,500	4,000	10/5	10.2	250	28.2	7,542	851	8,858	1,000	15,944	1,800
K513_0195 MT40	19.35	27869/1440	2,800	2,500	3,500	10/5	14.2	260	29.4	7,542	851	8,858	1,000	15,944	1,800
K513_0220 MT20	21.99	2639/120	2,800	2,500	4,000	10/5	4.4	245	27.7	7,089	800	8,194	925	10,782	1,217
K513_0220 MT30	21.99	2639/120	2,800	2,500	4,000	10/5	9.2	254	28.7	7,870	888	8,858	1,000	15,944	1,800
K513_0220 MT40	21.99	2639/120	2,800	2,500	3,500	10/5	13.2	263	29.6	7,870	888	8,858	1,000	15,944	1,800
K513_0240 MT20	24.35	11687/480	2,800	2,500	4,000	10/5	4.2	249	28.2	7,849	886	8,858	1,000	11,937	1,348
K513_0240 MT30	24.35	11687/480	2,800	2,500	4,000	10/5	9.0	257	29.0	7,972	900	8,858	1,000	15,944	1,800
K513_0240 MT40	24.35	11687/480	2,800	2,500	3,500	10/5	13.0	264	29.8	7,972	900	8,858	1,000	15,944	1,800
K513_0290 MT20	29.18	4669/160	3,400	3,000	4,500	10/5	3.3	256	28.8	7,525	850	8,858	1,000	13,530	1,527
K513_0290 MT30	29.18	4669/160	3,400	3,000	4,000	10/5	8.1	261	29.5	7,972	900	8,858	1,000	15,944	1,800
K513_0290 MT40	29.18	4669/160	3,000	3,000	3,500	10/5	12.1	266	30.0	7,972	900	8,858	1,000	15,944	1,800

Motor Shaft

Motor Adapter	Max. Shaft Diameter
MT10	19
MT20	24
MT30	38
MT40	48
MT50	60

Housing Styles

N Foot Mounted

F Round Flange

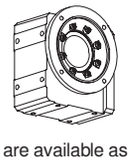

G Tapped Holes

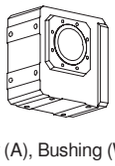

GD Torque Arm Bracket

These Housing Styles are available as Hollow (A), Bushing (W), or Solid (V) Output.

See Page 194 for required ordering information and part number example.

"K" Series–Right Angle Helical/Bevel ServoFit® Modular System Selection Data

STÖBER

Part Number	Reducer Ratio i		Input RPM Maximum Continuous n_{1DBH}	Input RPM Maximum Continuous n_{1DBV}	Input RPM Maximum Cyclic n_{1ZB}	Backlash arcmins $\Delta\varphi$ [1]	Input Inertia J_1	Torsional Stiffness per arcmin C_2		Output Torque Nominal [2] $M_{2N \le 2000\ RPM}$		Output Torque Acceleration M_{2B}		Output Torque Peak [3] M_{2PEAK}	
	Nom.	Exact					kgcm²	in.lbs.	Nm	in.lbs.	Nm	in.lbs.	Nm	in.lbs.	Nm
K513 with MT TriAdapt® Motor Adapter Continued														**Noise Level ≤ 61 dB(A)** [4]	
K513_0320 MT20	32.31	20677/640	3,400	3,000	4,500	10/5	3.2	258	29.1	7,972	900	8,858	1,000	14,980	1,691
K513_0320 MT30	32.31	20677/640	3,400	3,000	4,000	10/5	8.0	263	29.7	7,972	900	8,858	1,000	15,944	1,800
K513_0320 MT40	32.31	20677/640	3,000	3,000	3,500	10/5	12.0	267	30.1	7,972	900	8,858	1,000	15,944	1,800
K513_0350 MT20	34.80	174/5	3,400	3,000	4,500	10/5	2.8	260	29.3	7,852	886	8,858	1,000	15,606	1,762
K513_0350 MT30	34.80	174/5	3,400	3,000	4,000	10/5	7.6	264	29.8	7,972	900	8,858	1,000	15,606	1,762
K513_0350 MT40	34.80	174/5	3,000	3,000	3,500	10/5	11.6	267	30.2	7,972	900	8,858	1,000	15,606	1,762
K513_0390 MT20	38.53	2697/70	3,400	3,000	4,500	10/5	2.7	262	29.5	7,972	900	8,858	1,000	15,944	1,800
K513_0390 MT30	38.53	2697/70	3,400	3,000	4,000	10/5	7.5	265	29.9	7,972	900	8,858	1,000	15,944	1,800
K513_0390 MT40	38.53	2697/70	3,000	3,000	3,500	10/5	11.5	268	30.2	7,972	900	8,858	1,000	15,944	1,800
K513_0440 MT20	43.50	87/2	3,400	3,000	4,500	10/5	2.3	264	29.8	7,972	900	8,858	1,000	15,944	1,800
K513_0440 MT30	43.50	87/2	3,400	3,000	4,000	10/5	7.1	266	30.1	7,972	900	8,858	1,000	15,944	1,800
K513_0440 MT40	43.50	87/2	3,000	3,000	3,500	10/5	11.1	268	30.3	7,972	900	8,858	1,000	15,944	1,800
K513_0480 MT20	48.16	2697/56	3,400	3,000	4,500	10/5	2.2	265	29.9	7,972	900	8,858	1,000	15,944	1,800
K513_0480 MT30	48.16	2697/56	3,400	3,000	4,000	10/5	7.0	267	30.1	7,972	900	8,858	1,000	15,944	1,800
K513_0480 MT40	48.16	2697/56	3,000	3,000	3,500	10/5	11.0	269	30.3	7,972	900	8,858	1,000	15,944	1,800
K513_0580 MT20	58.30	11368/195	3,400	3,000	4,500	10/5	1.9	267	30.1	7,972	900	8,858	1,000	15,944	1,800
K513_0580 MT30	58.30	11368/195	3,400	3,000	4,000	10/5	6.7	268	30.3	7,972	900	8,858	1,000	15,944	1,800
K513_0580 MT40	58.30	11368/195	3,000	3,000	3,500	10/5	10.7	269	30.4	7,972	900	8,858	1,000	15,944	1,800
K513_0650 MT20	64.54	12586/195	3,400	3,000	4,500	10/5	1.8	267	30.2	7,972	900	8,858	1,000	15,944	1,800
K513_0650 MT30	64.54	12586/195	3,400	3,000	4,000	10/5	6.6	269	30.3	7,972	900	8,858	1,000	15,944	1,800
K513_0650 MT40	64.54	12586/195	3,000	3,000	3,500	10/5	10.6	270	30.4	7,972	900	8,858	1,000	15,944	1,800
K513_0700 MT20	70.08	841/12	3,400	3,000	4,500	10/5	1.7	268	30.2	7,268	821	8,722	985	11,440	1,291
K513_0700 MT30	70.08	841/12	3,400	3,000	4,000	10/5	6.5	269	30.3	7,268	821	8,722	985	11,440	1,291
K513_0780 MT20	77.59	26071/336	3,400	3,000	4,500	10/5	1.7	268	30.3	7,972	900	8,858	1,000	12,666	1,430
K513_0780 MT30	77.59	26071/336	3,400	3,000	4,000	10/5	6.5	269	30.4	7,972	900	8,858	1,000	12,666	1,430
K513_0870 MT20	87.29	8729/100	3,400	3,000	4,500	10/5	1.5	269	30.3	6,105	689	7,326	827	12,211	1,378
K513_0870 MT30	87.29	8729/100	3,400	3,000	4,000	10/5	6.3	269	30.4	6,105	689	7,326	827	12,211	1,378
K513_0970 MT20	96.64	38657/400	3,400	3,000	4,500	10/5	1.5	269	30.4	6,761	763	8,113	916	13,522	1,527
K513_0970 MT30	96.64	38657/400	3,400	3,000	4,000	10/5	6.3	270	30.4	6,761	763	8,113	916	13,522	1,527
K514 with MT TriAdapt® Motor Adapter Continued Next Page														**Noise Level ≤ 61 dB(A)** [4]	
K514_0850 MT20	85.03	76531/900	3,400	3,000	4,500	10/6	1.6	269	30.3	7,972	900	8,625	974	10,781	1,217
K514_0940 MT20	94.15	338923/3600	3,400	3,000	4,500	10/6	1.6	269	30.4	7,972	900	8,858	1,000	11,936	1,347
K514_1130 MT20	112.8	135401/1200	3,400	3,000	4,500	10/6	1.5	269	30.4	7,972	900	8,858	1,000	13,529	1,527
K514_1250 MT20	124.9	599633/4800	3,400	3,000	4,500	10/6	1.5	270	30.4	7,972	900	8,858	1,000	14,979	1,691
K514_1350 MT20	134.6	3364/25	3,400	3,000	4,500	10/6	1.5	270	30.5	7,972	900	8,858	1,000	15,604	1,762
K514_1490 MT20	149.0	26071/175	3,400	3,000	4,500	10/6	1.5	270	30.5	7,972	900	8,858	1,000	15,944	1,800
K514_1680 MT20	168.2	841/5	3,400	3,000	4,500	10/6	1.4	270	30.5	7,972	900	8,858	1,000	15,944	1,800
K514_1860 MT20	186.2	26071/140	3,400	3,000	4,500	10/6	1.4	270	30.5	7,972	900	8,858	1,000	15,944	1,800
K514_2250 MT20	225.4	659344/2925	3,400	3,000	4,500	10/6	1.4	270	30.5	7,972	900	8,858	1,000	15,944	1,800
K514_2500 MT20	249.6	729988/2925	3,400	3,000	4,500	10/6	1.4	270	30.5	7,972	900	8,858	1,000	15,944	1,800
K514_2710 MT20	271.0	24389/90	3,400	3,000	4,500	10/6	1.4	270	30.5	7,268	821	8,722	985	11,439	1,291

[1] Backlash shown "STANDARD/REDUCED".

[2] Maximum torque for continuous input RPM - horizontal output position.

[3] Maximum momentary torque for emergency stops or heavy shock load. Admissible stops per life of reducer = 1,000 stops maximum.

[4] dB(A)Measured at 1 meter distance with 3000 RPM input

Index of Symbols

- i ... Exact Ratio = Exact Tooth Count
- J_1 .... Reducer Inertia
- C ... ServoCool
- C_2 ... Torsional Stiffness
- n_{1DBH} ... Maximum Continuous Input RPM Horizontal Mounting - EL1, 2, 5, 6
- n_{1DBV} ... Maximum Continuous Input RPM Vertical Position - EL3 and EL4
- n_{1ZB} ... Maximum Cyclic Input RPM
- M_{2N} ... Nominal Torque @ 2000 RPM Input
- $M_{2N(n1DBH)}$ ... Rated Torque @ Maximum Continuous Input RPM Horizontal Mounting - EL1, EL2, EL5, EL6
- M_{2B} ... Acceleration Torque Maximum
- M_{2PEAK} ... Peak Torque

"K" Series–Right Angle Helical/Bevel ServoFit® Modular System Selection Data

Part Number	Reducer Ratio i		Input RPM Maximum Continuous		Input RPM Maximum Cyclic	Backlash arcmins	Input Inertia	Torsional Stiffness per arcmin		Output Torque Nominal [2]		Output Torque Acceleration		Output Torque Peak [3]	
							J_1	C_2		$M_{2N \le 2000\ RPM}$		M_{2B}		M_{2PEAK}	
	Nom.	Exact	n_{1DBH}	n_{1DBV}	n_{1ZB}	$\Delta\varphi$ [1]	kgcm²	in.lbs.	Nm	in.lbs.	Nm	in.lbs.	Nm	in.lbs.	Nm
K514 with MT TriAdapt® Motor Adapter Continued														**Noise Level ≤ 61 dB(A)** [4]	
K514_3000 MT20	300.0	756059/2520	3,400	3,000	4,500	10/6	1.4	270	30.5	7,972	900	8,858	1,000	12,665	1,430
K514_3380 MT20	337.5	253141/750	3,400	3,000	4,500	10/6	1.4	270	30.5	6,105	689	7,326	827	12,211	1,378
K514_3740 MT20	373.7	1121053/3000	3,400	3,000	4,500	10/6	1.4	270	30.5	6,761	763	8,113	916	13,522	1,527
K613 with MT TriAdapt® Motor Adapter Continued Next Page														**Noise Level ≤ 61 dB(A)** [4]	
K613_0073 MT30	7.323	19215/2624	1,800	1,700	2,900	10/5	37.9	216	24.4	5,891	665	6,480	732	11,477	1,296
K613_0073 MT40	7.323	19215/2624	1,800	1,700	2,900	10/5	41.9	285	32.2	7,208	814	9,182	1,037	11,477	1,296
K613_0073 MT50	7.323	19215/2624	1,800	1,700	2,900	10/5	51.9	354	39.9	7,208	814	12,178	1,375	21,932	2,476
K613_0081 MT30	8.107	85095/10496	1,800	1,700	2,900	10/5	34.8	236	26.6	6,522	736	7,174	810	12,706	1,434
K613_0081 MT40	8.107	85095/10496	1,800	1,700	2,900	10/5	38.8	301	33.9	7,457	842	10,165	1,148	12,706	1,434
K613_0081 MT50	8.107	85095/10496	1,800	1,700	2,900	10/5	48.8	361	40.8	7,457	842	12,597	1,422	24,280	2,741
K613_0091 MT30	9.081	20923/2304	1,800	1,700	2,900	10/5	28.8	257	29.0	7,306	825	8,036	907	13,823	1,561
K613_0091 MT40	9.081	20923/2304	1,800	1,700	2,900	10/5	32.8	317	35.7	7,744	874	11,059	1,248	13,823	1,561
K613_0091 MT50	9.081	20923/2304	1,800	1,700	2,900	10/5	42.8	369	41.6	7,744	874	13,083	1,477	25,688	2,900
K613_0100 MT30	10.05	92659/9216	1,800	1,700	2,900	10/5	26.8	275	31.1	8,012	904	8,897	1,004	15,305	1,728
K613_0100 MT40	10.05	92659/9216	1,800	1,700	2,900	10/5	30.8	329	37.2	8,012	904	12,244	1,382	15,305	1,728
K613_0100 MT50	10.05	92659/9216	1,800	1,700	2,900	10/5	40.8	374	42.2	8,012	904	13,534	1,528	25,688	2,900
K613_0115 MT30	11.41	22631/1984	2,200	2,000	3,200	10/5	22.1	296	33.4	8,356	943	10,094	1,140	16,789	1,895
K613_0115 MT40	11.41	22631/1984	2,200	2,000	3,200	10/5	26.1	343	38.7	8,356	943	13,431	1,516	16,789	1,895
K613_0115 MT50	11.41	22631/1984	2,200	2,000	3,000	10/5	36.1	379	42.8	8,356	943	13,431	1,516	16,789	1,895
K613_0125 MT30	12.63	3233/256	2,200	2,000	3,200	10/5	20.9	311	35.1	8,644	976	11,176	1,262	18,588	2,098
K613_0125 MT40	12.63	3233/256	2,200	2,000	3,200	10/5	24.9	352	39.7	8,644	976	14,173	1,600	18,588	2,098
K613_0125 MT50	12.63	3233/256	2,200	2,000	3,000	10/5	34.9	383	43.2	8,644	976	14,173	1,600	18,588	2,098
K613_0145 MT30	14.33	12383/864	2,200	2,000	3,200	10/5	17.4	327	36.9	9,017	1,018	12,683	1,432	20,378	2,301
K613_0145 MT40	14.33	12383/864	2,200	2,000	3,200	10/5	21.4	361	40.8	9,017	1,018	14,173	1,600	20,378	2,301
K613_0145 MT50	14.33	12383/864	2,200	2,000	3,000	10/5	31.4	386	43.6	9,017	1,018	14,173	1,600	20,378	2,301
K613_0160 MT30	15.87	54839/3456	2,200	2,000	3,200	10/5	16.6	338	38.2	9,328	1,053	14,042	1,585	22,562	2,547
K613_0160 MT40	15.87	54839/3456	2,200	2,000	3,200	10/5	20.6	368	41.5	9,328	1,053	14,173	1,600	22,562	2,547
K613_0160 MT50	15.87	54839/3456	2,200	2,000	3,000	10/5	30.6	389	43.9	9,328	1,053	14,173	1,600	22,562	2,547
K613_0170 MT20	17.16	549/32	2,600	2,300	3,600	10/5	9.7	319	36.0	5,811	656	6,392	722	9,119	1,029
K613_0170 MT30	17.16	549/32	2,600	2,300	3,600	10/5	14.5	346	39.0	9,574	1,081	14,173	1,600	23,519	2,655
K613_0170 MT40	17.16	549/32	2,600	2,300	3,500	10/5	18.5	372	42.0	9,574	1,081	14,173	1,600	23,519	2,655
K613_0170 MT50	17.16	549/32	2,500	2,300	3,000	10/5	28.5	390	44.1	9,574	1,081	14,173	1,600	23,519	2,655
K613_0190 MT20	18.99	17019/896	2,600	2,300	3,600	10/5	9.2	331	37.4	6,434	726	7,077	799	10,095	1,140
K613_0190 MT30	18.99	17019/896	2,600	2,300	3,600	10/5	14.0	355	40.0	9,904	1,118	14,173	1,600	25,688	2,900
K613_0190 MT40	18.99	17019/896	2,600	2,300	3,500	10/5	18.0	377	42.5	9,904	1,118	14,173	1,600	25,688	2,900
K613_0190 MT50	18.99	17019/896	2,500	2,300	3,000	10/5	28.0	392	44.2	9,904	1,118	14,173	1,600	25,688	2,900
K613_0220 MT20	21.68	5551/256	2,600	2,300	3,600	10/5	7.3	345	39.0	7,345	829	8,080	912	11,090	1,252
K613_0220 MT30	21.68	5551/256	2,600	2,300	3,600	10/5	12.1	364	41.1	10,351	1,169	14,173	1,600	25,688	2,900
K613_0220 MT40	21.68	5551/256	2,600	2,300	3,500	10/5	16.1	382	43.1	10,351	1,169	14,173	1,600	25,688	2,900
K613_0220 MT50	21.68	5551/256	2,500	2,300	3,000	10/5	26.1	394	44.4	10,351	1,169	14,173	1,600	25,688	2,900

Motor Shaft

Motor Adapter	Max. Shaft Diameter
MT10	19
MT20	24
MT30	38
MT40	48
MT50	60

Housing Styles

N Foot Mounted

F Round Flange

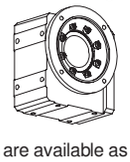

G Tapped Holes

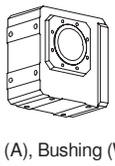

GD Torque Arm Bracket

These Housing Styles are available as Hollow (A), Bushing (W), or Solid (V) Output.

See Page 194 for required ordering information and part number example.

"K" Series–Right Angle Helical/Bevel ServoFit® Modular System Selection Data

STÖBER

Part Number	Reducer Ratio i		Input RPM Maximum Continuous		Input RPM Maximum Cyclic	Backlash arcmins	Input Inertia	Torsional Stiffness per arcmin		Output Torque Nominal [2]		Output Torque Acceleration		Output Torque Peak [3]	
										$M_{2N \le 2000\ RPM}$		M_{2B}		M_{2PEAK}	
	Nom.	Exact	n_{1DBH}	n_{1DBV}	n_{1ZB}	$\Delta\varphi$ [1]	J_1 kgcm²	C_2 in.lbs.	C_2 Nm	in.lbs.	Nm	in.lbs.	Nm	in.lbs.	Nm
K613 with MT TriAdapt® Motor Adapter Continued														**Noise Level ≤ 61 dB(A)** [4]	
K613_0240 MT20	24.01	24583/1024	2,600	2,300	3,600	10/5	6.9	354	40.0	8,132	918	8,945	1,010	12,278	1,386
K613_0240 MT30	24.01	24583/1024	2,600	2,300	3,600	10/5	11.7	370	41.8	10,708	1,209	14,173	1,600	25,688	2,900
K613_0240 MT40	24.01	24583/1024	2,600	2,300	3,500	10/5	15.7	385	43.5	10,708	1,209	14,173	1,600	25,688	2,900
K613_0240 MT50	24.01	24583/1024	2,500	2,300	3,000	10/5	25.7	395	44.6	10,708	1,209	14,173	1,600	25,688	2,900
K613_0290 MT20	28.77	29463/1024	3,100	2,800	4,000	10/5	5.1	367	41.4	8,786	992	10,721	1,210	13,916	1,571
K613_0290 MT30	28.77	29463/1024	3,100	2,800	4,000	10/5	9.9	379	42.7	11,374	1,284	14,173	1,600	25,688	2,900
K613_0290 MT40	28.77	29463/1024	3,000	2,800	3,500	10/5	13.9	389	43.9	11,374	1,284	14,173	1,600	25,688	2,900
K613_0290 MT50	28.77	29463/1024	2,500	2,500	3,000	10/5	23.9	396	44.7	11,374	1,284	14,173	1,600	25,688	2,900
K613_0320 MT20	31.86	130479/4096	3,100	2,800	4,000	10/5	4.9	372	42.0	9,727	1,098	11,869	1,340	15,407	1,739
K613_0320 MT30	31.86	130479/4096	3,100	2,800	4,000	10/5	9.7	382	43.2	11,767	1,328	14,173	1,600	25,688	2,900
K613_0320 MT40	31.86	130479/4096	3,000	2,800	3,500	10/5	13.7	391	44.2	11,767	1,328	14,173	1,600	25,688	2,900
K613_0320 MT50	31.86	130479/4096	2,500	2,500	3,000	10/5	23.7	397	44.8	11,767	1,328	14,173	1,600	25,688	2,900
K613_0350 MT20	34.61	35441/1024	3,100	2,800	4,000	10/5	4.1	376	42.5	8,925	1,008	12,838	1,449	16,048	1,812
K613_0350 MT30	34.61	35441/1024	3,100	2,800	4,000	10/5	8.9	385	43.4	12,097	1,366	14,173	1,600	25,688	2,900
K613_0350 MT40	34.61	35441/1024	3,000	2,800	3,500	10/5	12.9	392	44.3	12,097	1,366	14,173	1,600	25,688	2,900
K613_0350 MT50	34.61	35441/1024	2,500	2,500	3,000	10/5	22.9	397	44.8	12,097	1,366	14,173	1,600	25,688	2,900
K613_0380 MT20	38.32	156953/4096	3,100	2,800	4,000	10/5	3.9	380	42.9	9,882	1,116	14,173	1,600	17,767	2,006
K613_0380 MT30	38.32	156953/4096	3,100	2,800	4,000	10/5	8.7	387	43.7	12,514	1,413	14,173	1,600	25,688	2,900
K613_0380 MT40	38.32	156953/4096	3,000	2,800	3,500	10/5	12.7	394	44.4	12,514	1,413	14,173	1,600	25,688	2,900
K613_0380 MT50	38.32	156953/4096	2,500	2,500	3,000	10/5	22.7	398	44.9	12,514	1,413	14,173	1,600	25,688	2,900
K613_0430 MT20	43.11	8967/208	3,100	2,800	4,000	10/5	3.2	384	43.4	9,168	1,035	14,173	1,600	19,048	2,150
K613_0430 MT30	43.11	8967/208	3,100	2,800	4,000	10/5	8.0	390	44.0	12,844	1,450	14,173	1,600	19,048	2,150
K613_0430 MT40	43.11	8967/208	3,000	2,800	3,500	10/5	12.0	395	44.6	12,844	1,450	14,173	1,600	19,048	2,150
K613_0480 MT20	47.73	39711/832	3,100	2,800	4,000	10/5	3.1	387	43.7	10,150	1,146	14,173	1,600	21,089	2,381
K613_0480 MT30	47.73	39711/832	3,100	2,800	4,000	10/5	7.9	392	44.2	12,844	1,450	14,173	1,600	21,089	2,381
K613_0480 MT40	47.73	39711/832	3,000	2,800	3,500	10/5	11.9	396	44.7	12,844	1,450	14,173	1,600	21,089	2,381
K613_0580 MT20	57.55	29463/512	3,100	2,800	4,000	10/5	2.4	391	44.1	9,542	1,077	14,173	1,600	23,893	2,697
K613_0580 MT30	57.55	29463/512	3,100	2,800	4,000	10/5	7.2	394	44.5	12,844	1,450	14,173	1,600	23,893	2,697
K613_0580 MT40	57.55	29463/512	3,000	2,800	3,500	10/5	11.2	397	44.8	12,844	1,450	14,173	1,600	23,893	2,697
K613_0640 MT20	63.71	130479/2048	3,100	2,800	4,000	10/5	2.4	392	44.3	10,565	1,193	14,173	1,600	25,688	2,900
K613_0640 MT30	63.71	130479/2048	3,100	2,800	4,000	10/5	7.2	395	44.6	12,844	1,450	14,173	1,600	25,688	2,900
K613_0640 MT40	63.71	130479/2048	3,000	2,800	3,500	10/5	11.2	397	44.9	12,844	1,450	14,173	1,600	25,688	2,900
K613_0690 MT20	68.77	28609/416	3,100	2,800	4,000	10/5	2.1	393	44.4	9,750	1,101	13,967	1,577	23,278	2,628
K613_0690 MT30	68.77	28609/416	3,100	2,800	4,000	10/5	6.9	396	44.7	11,639	1,314	13,967	1,577	23,278	2,628
K613_0690 MT40	68.77	28609/416	3,000	2,800	3,500	10/5	10.9	398	44.9	11,639	1,314	13,967	1,577	23,278	2,628
K613_0760 MT20	76.14	126697/1664	3,100	2,800	4,000	10/5	2.0	394	44.5	10,794	1,219	14,173	1,600	25,688	2,900
K613_0760 MT30	76.14	126697/1664	3,100	2,800	4,000	10/5	6.8	396	44.7	12,844	1,450	14,173	1,600	25,688	2,900
K613_0760 MT40	76.14	126697/1664	3,000	2,800	3,500	10/5	10.8	398	44.9	12,844	1,450	14,173	1,600	25,688	2,900
K613_0860 MT20	86.18	66185/768	3,100	2,800	4,000	10/5	1.8	395	44.6	8,600	971	10,320	1,165	13,893	1,568
K613_0860 MT30	86.18	66185/768	3,100	2,800	4,000	10/5	6.6	397	44.8	8,600	971	10,320	1,165	13,893	1,568
K613_0950 MT20	95.41	293105/3072	3,100	2,800	4,000	10/5	1.8	396	44.7	9,524	1,075	11,429	1,290	15,382	1,736
K613_0950 MT30	95.41	293105/3072	3,100	2,800	4,000	10/5	6.6	397	44.9	9,524	1,075	11,429	1,290	15,382	1,736

[1] Backlash shown "STANDARD/REDUCED".

[2] Maximum torque for continuous input RPM - horizontal output position.

[3] Maximum momentary torque for emergency stops or heavy shock load. Admissible stops per life of reducer = 1,000 stops maximum.

[4] dB(A)Measured at 1 meter distance with 3000 RPM input

Index of Symbols

- i ... Exact Ratio = Exact Tooth Count
- J_1 .... Reducer Inertia
- C ... ServoCool
- C_2 ... Torsional Stiffness
- n_{1DBH} ... Maximum Continuous Input RPM Horizontal Mounting - EL1, 2, 5, 6
- n_{1DBV} ... Maximum Continuous Input RPM Vertical Position - EL3 and EL4
- n_{1ZB} ... Maximum Cyclic Input RPM
- M_{2N} ... Nominal Torque @ 2000 RPM Input
- $M_{2N(n1DBH)}$ ... Rated Torque @ Maximum Continuous Input RPM Horizontal Mounting - EL1, EL2, EL5, EL6
- M_{2B} ... Acceleration Torque Maximum
- M_{2PEAK} ... Peak Torque

K

STÖBER

"K" Series–Right Angle Helical/Bevel ServoFit® Modular System Selection Data

Part Number	Reducer Ratio i		Input RPM Maximum Continuous		Input RPM Maximum Cyclic	Backlash arcmins	Input Inertia	Torsional Stiffness per arcmin		Output Torque Nominal [2]		Output Torque Acceleration		Output Torque Peak [3]	
										$M_{2N \le 2000\ RPM}$		M_{2B}		M_{2PEAK}	
	Nom.	Exact	n_{1DBH}	n_{1DBV}	n_{1ZB}	$\Delta\varphi$ [1]	J_1 kgcm²	C_2 in.lbs.	C_2 Nm	in.lbs.	Nm	in.lbs.	Nm	in.lbs.	Nm
K614 with MT TriAdapt® Motor Adapter														**Noise Level ≤ 61 dB(A) [4]**	
K614_0840 MT20	83.84	160979/1920	3,100	2,800	4,000	10/6	1.8	395	44.6	8,871	1,001	8,871	1,001	11,088	1,252
K614_0930 MT20	92.83	712907/7680	3,100	2,800	4,000	10/6	1.7	396	44.7	9,821	1,109	9,821	1,109	12,277	1,386
K614_1110 MT20	111.3	284809/2560	3,100	2,800	4,000	10/6	1.6	397	44.8	11,132	1,257	11,132	1,257	13,915	1,571
K614_1230 MT20	123.2	1261297/10240	3,100	2,800	4,000	10/6	1.6	397	44.9	12,325	1,391	12,325	1,391	15,406	1,739
K614_1340 MT20	133.8	1027789/7680	3,100	2,800	4,000	10/6	1.6	398	44.9	12,837	1,449	12,837	1,449	16,046	1,812
K614_1480 MT20	148.2	4551637/30720	3,100	2,800	4,000	10/6	1.5	398	44.9	12,844	1,450	14,173	1,600	17,766	2,006
K614_1670 MT20	166.7	86681/520	3,100	2,800	4,000	10/6	1.5	398	45.0	12,844	1,450	14,173	1,600	19,047	2,150
K614_1850 MT20	184.6	383873/2080	3,100	2,800	4,000	10/6	1.5	399	45.0	12,844	1,450	14,173	1,600	21,087	2,381
K614_2230 MT20	222.5	284809/1280	3,100	2,800	4,000	10/6	1.4	399	45.0	12,844	1,450	14,173	1,600	23,891	2,697
K614_2460 MT20	246.3	1261297/5120	3,100	2,800	4,000	10/6	1.4	399	45.0	12,844	1,450	14,173	1,600	25,688	2,900
K614_2660 MT20	265.9	829661/3120	3,100	2,800	4,000	10/6	1.4	399	45.0	11,639	1,314	13,967	1,577	23,278	2,628
K614_2940 MT20	294.4	3674213/12480	3,100	2,800	4,000	10/6	1.4	399	45.1	12,844	1,450	14,173	1,600	25,688	2,900
K614_3330 MT20	333.2	383873/1152	3,100	2,800	4,000	10/6	1.4	399	45.1	8,600	971	10,320	1,165	13,892	1,568
K614_3690 MT20	368.9	1700009/4608	3,100	2,800	4,000	10/6	1.4	399	45.1	9,524	1,075	11,429	1,290	15,380	1,736
K713 with MT TriAdapt® Motor Adapter Continued Next Page														**Noise Level ≤ 59 dB(A) [4]**	
K713_0076 MT30	7.563	19845/2624	1,700	1,600	2,700	10/5	71.2	295	33.4	6,084	687	6,693	756	12,169	1,374
K713_0076 MT40	7.563	19845/2624	1,700	1,600	2,700	10/5	75.2	428	48.3	9,837	1,111	9,837	1,111	12,297	1,388
K713_0076 MT50	7.563	19845/2624	1,700	1,600	2,700	10/5	85.2	590	66.7	11,924	1,346	18,798	2,122	23,498	2,653
K713_0084 MT30	8.373	87885/10496	1,700	1,600	2,700	10/5	66.3	331	37.4	6,736	760	7,410	836	13,472	1,521
K713_0084 MT40	8.373	87885/10496	1,700	1,600	2,700	10/5	70.3	463	52.2	10,891	1,230	10,891	1,230	13,614	1,537
K713_0084 MT50	8.373	87885/10496	1,700	1,600	2,700	10/5	80.3	611	68.9	12,336	1,393	20,812	2,349	26,014	2,937
K713_0092 MT30	9.188	147/16	1,700	1,600	2,700	10/5	54.4	365	41.2	7,392	834	8,131	918	14,515	1,639
K713_0092 MT40	9.188	147/16	1,700	1,600	2,700	10/5	58.4	492	55.6	11,612	1,311	11,612	1,311	14,515	1,639
K713_0092 MT50	9.188	147/16	1,700	1,600	2,700	10/5	68.4	627	70.7	12,724	1,436	21,495	2,427	27,736	3,131
K713_0100 MT30	10.17	651/64	1,700	1,600	2,700	10/5	51.2	401	45.3	8,183	924	9,002	1,016	16,069	1,814
K713_0100 MT40	10.17	651/64	1,700	1,600	2,700	10/5	55.2	523	59.0	12,855	1,451	12,855	1,451	16,069	1,814
K713_0100 MT50	10.17	651/64	1,700	1,600	2,700	10/5	65.2	642	72.4	13,163	1,486	22,237	2,510	30,706	3,467
K713_0120 MT30	11.78	23373/1984	2,000	1,900	3,000	10/5	39.2	452	51.0	9,478	1,070	10,425	1,177	17,928	2,024
K713_0120 MT40	11.78	23373/1984	2,000	1,900	3,000	10/5	43.2	562	63.4	13,823	1,561	14,342	1,619	17,928	2,024
K713_0120 MT50	11.78	23373/1984	2,000	1,900	3,000	10/5	53.2	660	74.5	13,823	1,561	23,031	2,600	34,258	3,868
K713_0130 MT30	13.04	3339/256	2,000	1,900	3,000	10/5	37.2	485	54.8	10,493	1,185	11,542	1,303	19,849	2,241
K713_0130 MT40	13.04	3339/256	2,000	1,900	3,000	10/5	41.2	585	66.1	14,300	1,614	15,879	1,793	19,849	2,241
K713_0130 MT50	13.04	3339/256	2,000	1,900	3,000	10/5	51.2	670	75.6	14,300	1,614	23,031	2,600	37,928	4,282
K713_0150 MT30	14.80	1421/96	2,000	1,900	3,000	10/5	29.8	523	59.1	11,908	1,344	13,099	1,479	21,761	2,457
K713_0150 MT40	14.80	1421/96	2,000	1,900	3,000	10/5	33.8	611	68.9	14,916	1,684	17,409	1,965	21,761	2,457
K713_0150 MT50	14.80	1421/96	2,000	1,900	3,000	10/5	43.8	680	76.8	14,916	1,684	23,031	2,600	41,582	4,694
K713_0165 MT30	16.39	6293/384	2,000	1,900	3,000	10/5	28.5	551	62.2	13,184	1,488	14,502	1,637	24,092	2,720
K713_0165 MT40	16.39	6293/384	2,000	1,900	3,000	10/5	32.5	628	70.9	15,431	1,742	19,274	2,176	24,092	2,720
K713_0165 MT50	16.39	6293/384	2,000	1,900	3,000	10/5	42.5	687	77.6	15,431	1,742	23,031	2,600	42,518	4,800

Motor Shaft

Motor Adapter	Max. Shaft Diameter
MT10	19
MT20	24
MT30	38
MT40	48
MT50	60

Housing Styles

N Foot Mounted

F Round Flange

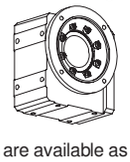

G Tapped Holes

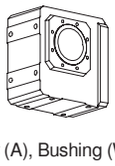

GD Torque Arm Bracket

These Housing Styles are available as Hollow (A), Bushing (W), or Solid (V) Output.

See Page 194 for required ordering information and part number example.

"K" Series–Right Angle Helical/Bevel ServoFit® Modular System Selection Data

STÖBER

Part Number	Reducer Ratio i		Input RPM Maximum Continuous		Input RPM Maximum Cyclic	Backlash arcmins	Input Inertia	Torsional Stiffness per arcmin		Output Torque Nominal [2]		Output Torque Acceleration		Output Torque Peak [3]	
										$M_{2N \le 2000\ RPM}$		M_{2B}		M_{2PEAK}	
	Nom.	Exact	n_{1DBH}	n_{1DBV}	n_{1ZB}	$\Delta\varphi$ [1]	J_1 kgcm²	C_2 in.lbs.	C_2 Nm	in.lbs.	Nm	in.lbs.	Nm	in.lbs.	Nm
K713 with MT TriAdapt® Motor Adapter Continued														**Noise Level ≤ 59 dB(A)** [4]	
K713_0185 MT30	18.28	26901/1472	2,400	2,200	3,400	10/5	23.8	577	65.2	14,702	1,660	16,172	1,826	25,811	2,914
K713_0185 MT40	18.28	26901/1472	2,400	2,200	3,400	10/5	27.8	644	72.7	16,001	1,806	20,649	2,331	25,811	2,914
K713_0185 MT50	18.28	26901/1472	2,400	2,200	3,000	10/5	37.8	693	78.2	16,001	1,806	23,031	2,600	42,518	4,800
K713_0200 MT30	20.23	119133/5888	2,400	2,200	3,400	10/5	23.0	599	67.6	16,277	1,838	17,905	2,021	28,576	3,226
K713_0200 MT40	20.23	119133/5888	2,400	2,200	3,400	10/5	27.0	657	74.1	16,554	1,869	22,861	2,581	28,576	3,226
K713_0200 MT50	20.23	119133/5888	2,400	2,200	3,000	10/5	37.0	698	78.8	16,554	1,869	23,031	2,600	42,518	4,800
K713_0230 MT30	22.74	14553/640	2,400	2,200	3,400	10/5	18.8	621	70.1	16,193	1,828	20,122	2,272	30,795	3,476
K713_0230 MT40	22.74	14553/640	2,400	2,200	3,400	10/5	22.8	669	75.5	17,211	1,943	23,031	2,600	30,795	3,476
K713_0230 MT50	22.74	14553/640	2,400	2,200	3,000	10/5	32.8	702	79.3	17,211	1,943	23,031	2,600	42,518	4,800
K713_0250 MT30	25.18	64449/2560	2,400	2,200	3,400	10/5	18.2	637	71.9	17,804	2,010	22,278	2,515	34,094	3,849
K713_0250 MT40	25.18	64449/2560	2,400	2,200	3,400	10/5	22.2	677	76.5	17,804	2,010	23,031	2,600	34,094	3,849
K713_0250 MT50	25.18	64449/2560	2,400	2,200	3,000	10/5	32.2	705	79.6	17,804	2,010	23,031	2,600	42,518	4,800
K713_0290 MT30	29.29	7497/256	2,900	2,600	3,800	10/5	14.5	656	74.1	17,161	1,937	23,031	2,600	37,773	4,264
K713_0290 MT40	29.29	7497/256	2,900	2,600	3,500	10/5	18.5	688	77.6	18,725	2,114	23,031	2,600	37,773	4,264
K713_0290 MT50	29.29	7497/256	2,500	2,500	3,000	10/5	28.5	709	80.0	18,725	2,114	23,031	2,600	42,518	4,800
K713_0320 MT30	32.42	33201/1024	2,900	2,600	3,800	10/5	14.2	667	75.3	19,000	2,145	23,031	2,600	41,821	4,721
K713_0320 MT40	32.42	33201/1024	2,900	2,600	3,500	10/5	18.2	693	78.3	19,371	2,187	23,031	2,600	41,821	4,721
K713_0320 MT50	32.42	33201/1024	2,500	2,500	3,000	10/5	28.2	711	80.2	19,371	2,187	23,031	2,600	42,518	4,800
K713_0350 MT30	35.44	567/16	2,900	2,600	3,800	10/5	12.2	675	76.2	17,666	1,994	23,031	2,600	42,518	4,800
K713_0350 MT40	35.44	567/16	2,900	2,600	3,500	10/5	16.2	697	78.7	19,954	2,253	23,031	2,600	42,518	4,800
K713_0350 MT50	35.44	567/16	2,500	2,500	3,000	10/5	26.2	712	80.4	19,954	2,253	23,031	2,600	42,518	4,800
K713_0390 MT30	39.23	2511/64	2,900	2,600	3,800	10/5	12.0	683	77.1	19,558	2,208	23,031	2,600	42,518	4,800
K713_0390 MT40	39.23	2511/64	2,900	2,600	3,500	10/5	16.0	701	79.2	20,642	2,330	23,031	2,600	42,518	4,800
K713_0390 MT50	39.23	2511/64	2,500	2,500	3,000	10/5	26.0	713	80.5	20,642	2,330	23,031	2,600	42,518	4,800
K713_0450 MT30	45.05	37485/832	2,900	2,600	3,800	10/5	10.2	691	78.0	18,248	2,060	23,031	2,600	42,518	4,800
K713_0450 MT40	45.05	37485/832	2,900	2,600	3,500	10/5	14.2	705	79.6	21,259	2,400	23,031	2,600	42,518	4,800
K713_0450 MT50	45.05	37485/832	2,500	2,500	3,000	10/5	24.2	715	80.7	21,259	2,400	23,031	2,600	42,518	4,800
K713_0500 MT30	49.88	166005/3328	2,900	2,600	3,800	10/5	10.1	696	78.6	20,203	2,281	23,031	2,600	42,518	4,800
K713_0500 MT40	49.88	166005/3328	2,900	2,600	3,500	10/5	14.1	708	79.9	21,259	2,400	23,031	2,600	42,518	4,800
K713_0500 MT50	49.88	166005/3328	2,500	2,500	3,000	10/5	24.1	715	80.8	21,259	2,400	23,031	2,600	42,518	4,800
K713_0590 MT30	58.57	7497/128	2,900	2,600	3,800	10/5	8.7	702	79.3	19,023	2,148	23,031	2,600	42,518	4,800
K713_0590 MT40	58.57	7497/128	2,900	2,600	3,500	10/5	12.7	711	80.3	21,259	2,400	23,031	2,600	42,518	4,800
K713_0590 MT50	58.57	7497/128	2,500	2,500	3,000	10/5	22.7	716	80.9	21,259	2,400	23,031	2,600	42,518	4,800
K713_0650 MT30	64.85	33201/512	2,900	2,600	3,800	10/5	8.6	705	79.6	21,061	2,378	23,031	2,600	42,518	4,800
K713_0650 MT40	64.85	33201/512	2,900	2,600	3,500	10/5	12.6	712	80.4	21,259	2,400	23,031	2,600	42,518	4,800
K713_0650 MT50	64.85	33201/512	2,500	2,500	3,000	10/5	22.6	717	80.9	21,259	2,400	23,031	2,600	42,518	4,800
K713_0710 MT30	71.20	4557/64	2,900	2,600	3,800	10/5	7.9	707	79.9	19,244	2,173	23,031	2,600	29,355	3,314
K713_0710 MT40	71.20	4557/64	2,900	2,600	3,500	10/5	11.9	713	80.5	19,244	2,173	23,031	2,600	29,355	3,314
K713_0790 MT30	78.83	20181/256	2,900	2,600	3,800	10/5	7.8	710	80.1	21,259	2,400	23,031	2,600	32,500	3,669
K713_0790 MT40	78.83	20181/256	2,900	2,600	3,500	10/5	11.8	714	80.7	21,259	2,400	23,031	2,600	32,500	3,669
K713_0890 MT30	89.00	22785/256	2,900	2,600	3,800	10/5	7.3	712	80.3	14,803	1,671	17,764	2,005	29,607	3,342
K713_0890 MT40	89.00	22785/256	2,900	2,600	3,500	10/5	11.3	715	80.8	14,803	1,671	17,764	2,005	29,607	3,342
K713_0990 MT30	98.54	100905/1024	2,900	2,600	3,800	10/5	7.2	713	80.5	16,394	1,851	19,672	2,221	32,787	3,701
K713_0990 MT40	98.54	100905/1024	2,900	2,600	3,500	10/5	11.2	716	80.8	16,394	1,851	19,672	2,221	32,787	3,701

[1] Backlash shown "STANDARD/REDUCED".

[2] Maximum torque for continuous input RPM - horizontal output position.

[3] Maximum momentary torque for emergency stops or heavy shock load. Admissible stops per life of reducer = 1,000 stops maximum.

[4] dB(A)Measured at 1 meter distance with 3000 RPM input

Index of Symbols

- i ... Exact Ratio = Exact Tooth Count
- J_1 .... Reducer Inertia
- C ... ServoCool
- C_2 ... Torsional Stiffness
- n_{1DBH} ... Maximum Continuous Input RPM Horizontal Mounting - EL1, 2, 5, 6
- n_{1DBV} ... Maximum Continuous Input RPM Vertical Position - EL3 and EL4
- n_{1ZB} ... Maximum Cyclic Input RPM
- M_{2N} ... Nominal Torque @ 2000 RPM Input
- $M_{2N(n1DBH)}$ ... Rated Torque @ Maximum Continuous Input RPM Horizontal Mounting - EL1, EL2, EL5, EL6
- M_{2B} ... Acceleration Torque Maximum
- M_{2PEAK} ... Peak Torque

K

STÖBER

"K" Series–Right Angle Helical/Bevel ServoFit® Modular System Selection Data

Part Number	Reducer Ratio i		Input RPM Maximum Continuous		Input RPM Maximum Cyclic	Backlash arcmins	Input Inertia	Torsional Stiffness per arcmin		Output Torque Nominal [2]		Output Torque Acceleration		Output Torque Peak [3]	
							J_1	C_2		$M_{2N \le 2000\ RPM}$		M_{2B}		M_{2PEAK}	
	Nom.	Exact	n_{1DBH}	n_{1DBV}	n_{1ZB}	$\Delta\varphi$ [1]	kgcm²	in.lbs.	Nm	in.lbs.	Nm	in.lbs.	Nm	in.lbs.	Nm
K714 with MT TriAdapt® Motor Adapter														**Noise Level ≤ 59 dB(A)** [4]	
K714_0890 MT30	89.06	227997/2560	2,900	2,600	3,800	10/6	7.3	712	80.3	21,259	2,400	23,031	2,600	30,792	3,476
K714_0990 MT30	98.60	1009701/10240	2,900	2,600	3,800	10/6	7.2	713	80.5	21,259	2,400	23,031	2,600	34,091	3,849
K714_1130 MT20	113.2	72471/640	2,900	2,600	3,800	10/6	1.9	712	80.3	11,715	1,323	11,715	1,323	14,644	1,653
K714_1150 MT30	114.7	117453/1024	2,900	2,600	3,800	10/6	7.0	714	80.7	21,259	2,400	23,031	2,600	37,770	4,264
K714_1250 MT20	125.4	320943/2560	2,900	2,600	3,800	10/6	1.9	713	80.5	12,970	1,464	12,970	1,464	16,213	1,830
K714_1270 MT30	127.0	520149/4096	2,900	2,600	3,800	10/6	7.0	715	80.8	21,259	2,400	23,031	2,600	41,817	4,721
K714_1370 MT20	137.0	5481/40	2,900	2,600	3,800	10/6	1.8	714	80.6	13,615	1,537	13,615	1,537	17,018	1,921
K714_1390 MT30	138.8	8883/64	2,900	2,600	3,800	10/6	6.9	716	80.8	21,259	2,400	23,031	2,600	42,518	4,800
K714_1520 MT20	151.7	24273/160	2,900	2,600	3,800	10/6	1.8	715	80.7	15,073	1,702	15,073	1,702	18,842	2,127
K714_1540 MT30	153.7	39339/256	2,900	2,600	3,800	10/6	6.8	716	80.9	21,259	2,400	23,031	2,600	42,518	4,800
K714_1740 MT20	174.2	72471/416	2,900	2,600	3,800	10/6	1.6	716	80.8	16,434	1,855	16,434	1,855	20,542	2,319
K714_1760 MT30	176.5	587265/3328	2,900	2,600	3,800	10/6	6.7	717	80.9	21,259	2,400	23,031	2,600	42,518	4,800
K714_1930 MT20	192.9	320943/1664	2,900	2,600	3,800	10/6	1.6	716	80.9	18,194	2,054	18,194	2,054	22,743	2,567
K714_1950 MT30	195.4	2600745/13312	2,900	2,600	3,800	10/6	6.7	717	81.0	21,259	2,400	23,031	2,600	42,518	4,800
K714_2260 MT20	226.5	72471/320	2,900	2,600	3,800	10/6	1.5	717	81.0	17,798	2,009	20,216	2,282	25,271	2,853
K714_2290 MT30	229.4	117453/512	2,900	2,600	3,800	10/6	6.6	718	81.0	21,259	2,400	23,031	2,600	42,518	4,800
K714_2510 MT20	250.7	320943/1280	2,900	2,600	3,800	10/6	1.5	717	81.0	19,705	2,225	22,382	2,527	27,978	3,159
K714_2540 MT30	254.0	520149/2048	2,900	2,600	3,800	10/6	6.6	718	81.1	21,259	2,400	23,031	2,600	42,518	4,800
K714_2750 MT20	275.3	44051/160	2,900	2,600	3,800	10/6	1.5	718	81.0	18,362	2,073	23,031	2,600	29,352	3,314
K714_3050 MT20	304.8	195083/640	2,900	2,600	3,800	10/6	1.5	718	81.0	20,330	2,295	23,031	2,600	32,497	3,669
K714_3440 MT20	344.1	44051/128	2,900	2,600	3,800	10/6	1.4	718	81.1	14,803	1,671	17,764	2,005	29,607	3,342
K714_3810 MT20	381.0	195083/512	2,900	2,600	3,800	10/6	1.4	718	81.1	16,394	1,851	19,672	2,221	32,787	3,701
K813 with MT TriAdapt® Motor Adapter Continued Next Page														**Noise Level ≤ 65 dB(A)** [4]	
K813_0074 MT30	7.445	3127/420	1,600	1,500	2,600	10/5	161.2	350	39.5	5,989	676	6,588	744	11,979	1,352
K813_0074 MT40	7.445	3127/420	1,600	1,500	2,600	10/5	165.2	564	63.7	10,163	1,147	10,163	1,147	12,704	1,434
K813_0074 MT50	7.445	3127/420	1,600	1,500	2,600	10/5	175.2	900	101.6	19,420	2,192	19,420	2,192	24,275	2,740
K813_0082 MT30	8.243	96937/11760	1,600	1,500	2,600	10/5	142.9	404	45.6	6,631	749	7,294	823	13,263	1,497
K813_0082 MT40	8.243	96937/11760	1,600	1,500	2,600	10/5	146.9	628	70.8	11,252	1,270	11,252	1,270	14,065	1,588
K813_0082 MT50	8.243	96937/11760	1,600	1,500	2,600	10/5	156.9	949	107.2	21,242	2,398	21,502	2,427	26,877	3,034
K813_0093 MT30	9.284	11977/1290	1,600	1,500	2,600	10/5	115.5	471	53.2	7,469	843	8,216	927	14,938	1,686
K813_0093 MT40	9.284	11977/1290	1,600	1,500	2,600	10/5	119.5	702	79.2	12,266	1,385	12,266	1,385	15,333	1,731
K813_0093 MT50	9.284	11977/1290	1,600	1,500	2,600	10/5	129.5	1,001	113.0	22,101	2,495	23,439	2,646	29,299	3,308
K813_0105 MT30	10.28	53041/5160	1,600	1,500	2,600	10/5	103.7	533	60.1	8,269	934	9,096	1,027	16,539	1,867
K813_0105 MT40	10.28	53041/5160	1,600	1,500	2,600	10/5	107.7	763	86.2	13,581	1,533	13,581	1,533	16,976	1,916
K813_0105 MT50	10.28	53041/5160	1,600	1,500	2,600	10/5	117.7	1,039	117.3	22,864	2,581	25,951	2,930	32,439	3,662
K813_0120 MT30	11.91	6608/555	1,900	1,800	2,900	10/5	80.6	624	70.4	9,578	1,081	10,536	1,189	18,938	2,138
K813_0120 MT40	11.91	6608/555	1,900	1,800	2,900	10/5	84.6	848	95.7	15,150	1,710	15,150	1,710	18,938	2,138
K813_0120 MT50	11.91	6608/555	1,900	1,800	2,900	10/5	94.6	1,086	122.6	24,011	2,711	28,950	3,268	36,188	4,085

Motor Shaft

Motor Adapter	Max. Shaft Diameter
MT10	19
MT20	24
MT30	38
MT40	48
MT50	60

Housing Styles

N Foot Mounted

F Round Flange

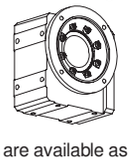

G Tapped Holes

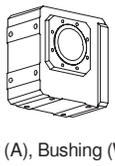

GD Torque Arm Bracket

These Housing Styles are available as Hollow (A), Bushing (W), or Solid (V) Output.

See Page 194 for required ordering information and part number example.

"K" Series–Right Angle Helical/Bevel ServoFit® Modular System Selection Data

STÖBER

Part Number	Reducer Ratio i		Input RPM Maximum Continuous		Input RPM Maximum Cyclic	Backlash arcmins	Input Inertia	Torsional Stiffness per arcmin		Output Torque Nominal 2)		Output Torque Acceleration		Output Torque Peak 3)	
										$M_{2N \le 2000\ RPM}$		M_{2B}		M_{2PEAK}	
	Nom.	Exact	n_{1DBH}	n_{1DBV}	n_{1ZB}	$\Delta\varphi$ 1)	J_1	C_2							
							$kgcm^2$	in.lbs.	Nm	in.lbs.	Nm	in.lbs.	Nm	in.lbs.	Nm
K813 with MT TriAdapt® Motor Adapter Continued Next Page														**Noise Level ≤ 65 dB(A)** 4)	
K813_0130 MT30	13.18	7316/555	1,900	1,800	2,900	10/5	73.4	687	77.6	10,605	1,197	11,665	1,317	20,967	2,367
K813_0130 MT40	13.18	7316/555	1,900	1,800	2,900	10/5	77.4	901	101.8	16,774	1,894	16,774	1,894	20,967	2,367
K813_0130 MT50	13.18	7316/555	1,900	1,800	2,900	10/5	87.4	1,113	125.7	24,840	2,804	32,053	3,619	40,066	4,523
K813_0150 MT30	14.84	9499/640	1,900	1,800	2,900	10/5	59.2	760	85.8	11,940	1,348	13,134	1,483	22,766	2,570
K813_0150 MT40	14.84	9499/640	1,900	1,800	2,900	10/5	63.2	958	108.2	18,213	2,056	18,213	2,056	22,766	2,570
K813_0150 MT50	14.84	9499/640	1,900	1,800	2,900	10/5	73.2	1,140	128.7	25,842	2,917	34,803	3,929	43,504	4,911
K813_0165 MT30	16.43	42067/2560	1,900	1,800	2,900	10/5	54.5	819	92.5	13,219	1,492	14,541	1,642	25,205	2,845
K813_0165 MT40	16.43	42067/2560	1,900	1,800	2,900	10/5	58.5	1,001	113.1	20,164	2,276	20,164	2,276	25,205	2,845
K813_0165 MT50	16.43	42067/2560	1,900	1,800	2,900	10/5	68.5	1,159	130.9	26,734	3,018	38,531	4,350	48,164	5,437
K813_0175 MT30	17.33	30149/1740	2,300	2,100	3,300	10/5	48.4	849	95.8	13,939	1,574	15,333	1,731	25,932	2,928
K813_0175 MT40	17.33	30149/1740	2,300	2,100	3,300	10/5	52.4	1,022	115.4	20,746	2,342	20,746	2,342	25,932	2,928
K813_0175 MT50	17.33	30149/1740	2,300	2,100	3,000	10/5	62.4	1,168	131.8	27,211	3,072	39,642	4,475	49,553	5,594
K813_0190 MT30	19.18	133517/6960	2,300	2,100	3,300	10/5	45.1	902	101.8	15,432	1,742	16,976	1,916	28,710	3,241
K813_0190 MT40	19.18	133517/6960	2,300	2,100	3,300	10/5	49.1	1,058	119.4	22,968	2,593	22,968	2,593	28,710	3,241
K813_0190 MT50	19.18	133517/6960	2,300	2,100	3,000	10/5	59.1	1,183	133.5	28,149	3,178	41,190	4,650	54,861	6,193
K813_0230 MT30	23.04	31801/1380	2,300	2,100	3,300	10/5	33.8	987	111.4	18,539	2,093	20,392	2,302	32,546	3,674
K813_0230 MT40	23.04	31801/1380	2,300	2,100	3,300	10/5	37.8	1,111	125.4	26,037	2,939	26,037	2,939	32,546	3,674
K813_0230 MT50	23.04	31801/1380	2,300	2,100	3,000	10/5	47.8	1,203	135.8	29,924	3,378	41,190	4,650	62,192	7,021
K813_0260 MT30	25.51	140833/5520	2,300	2,100	3,300	10/5	31.9	1,027	115.9	20,525	2,317	22,577	2,549	36,033	4,068
K813_0260 MT40	25.51	140833/5520	2,300	2,100	3,300	10/5	35.9	1,134	128.1	28,827	3,254	28,827	3,254	36,033	4,068
K813_0260 MT50	25.51	140833/5520	2,300	2,100	3,000	10/5	45.9	1,212	136.8	30,956	3,495	41,190	4,650	68,856	7,773
K813_0290 MT30	29.25	7021/240	2,800	2,500	3,600	10/5	24.9	1,073	121.2	20,833	2,352	25,888	2,923	39,618	4,473
K813_0290 MT40	29.25	7021/240	2,800	2,500	3,500	10/5	28.9	1,161	131.0	31,694	3,578	31,694	3,578	39,618	4,473
K813_0290 MT50	29.25	7021/240	2,500	2,500	3,000	10/5	38.9	1,221	137.9	32,401	3,658	41,190	4,650	74,407	8,400
K813_0320 MT30	32.39	31093/960	2,800	2,500	3,600	10/5	23.7	1,102	124.4	23,065	2,604	28,662	3,236	43,863	4,952
K813_0320 MT40	32.39	31093/960	2,800	2,500	3,500	10/5	27.7	1,176	132.8	33,519	3,784	35,091	3,961	43,863	4,952
K813_0320 MT50	32.39	31093/960	2,500	2,500	3,000	10/5	37.7	1,227	138.5	33,519	3,784	41,190	4,650	74,407	8,400
K813_0360 MT30	36.14	2891/80	2,800	2,500	3,600	10/5	19.4	1,129	127.4	21,177	2,391	31,980	3,610	46,613	5,262
K813_0360 MT40	36.14	2891/80	2,800	2,500	3,500	10/5	23.4	1,191	134.4	34,766	3,925	37,290	4,210	46,613	5,262
K813_0360 MT50	36.14	2891/80	2,500	2,500	3,000	10/5	33.4	1,232	139.1	34,766	3,925	41,190	4,650	74,407	8,400
K813_0400 MT30	40.01	12803/320	2,800	2,500	3,600	10/5	18.6	1,150	129.8	23,446	2,647	35,405	3,997	51,606	5,826
K813_0400 MT40	40.01	12803/320	2,800	2,500	3,500	10/5	22.6	1,201	135.6	35,965	4,060	41,190	4,650	51,606	5,826
K813_0400 MT50	40.01	12803/320	2,500	2,500	3,000	10/5	32.6	1,236	139.5	35,965	4,060	41,190	4,650	74,407	8,400
K813_0440 MT30	44.25	177/4	2,800	2,500	3,600	10/5	15.5	1,167	131.8	22,059	2,490	39,158	4,421	54,814	6,188
K813_0440 MT40	44.25	177/4	2,800	2,500	3,500	10/5	19.5	1,210	136.6	37,194	4,199	41,190	4,650	54,814	6,188
K813_0440 MT50	44.25	177/4	2,500	2,500	3,000	10/5	29.5	1,239	139.8	37,194	4,199	41,190	4,650	54,814	6,188
K813_0490 MT30	48.99	5487/112	2,800	2,500	3,600	10/5	15.0	1,182	133.4	24,422	2,757	41,190	4,650	60,687	6,851
K813_0490 MT40	48.99	5487/112	2,800	2,500	3,500	10/5	19.0	1,218	137.5	37,204	4,200	41,190	4,650	60,687	6,851
K813_0490 MT50	48.99	5487/112	2,500	2,500	3,000	10/5	29.0	1,241	140.1	37,204	4,200	41,190	4,650	60,687	6,851
K813_0590 MT30	59.08	42539/720	2,800	2,500	3,600	10/5	11.8	1,203	135.8	22,721	2,565	41,190	4,650	68,590	7,743
K813_0590 MT40	59.08	42539/720	2,800	2,500	3,500	10/5	15.8	1,228	138.7	37,204	4,200	41,190	4,650	68,590	7,743
K813_0590 MT50	59.08	42539/720	2,500	2,500	3,000	10/5	25.8	1,245	140.5	37,204	4,200	41,190	4,650	68,590	7,743

1) Backlash shown "STANDARD/REDUCED".

2) Maximum torque for continuous input RPM - horizontal output position.

3) Maximum momentary torque for emergency stops or heavy shock load. Admissible stops per life of reducer = 1,000 stops maximum.

4) dB(A)Measured at 1 meter distance with 3000 RPM input

Index of Symbols

- i ... Exact Ratio = Exact Tooth Count
- J_1 .... Reducer Inertia
- C ... ServoCool
- C_2 ... Torsional Stiffness
- n_{1DBH} ... Maximum Continuous Input RPM Horizontal Mounting - EL1, 2, 5, 6
- n_{1DBV} ... Maximum Continuous Input RPM Vertical Position - EL3 and EL4
- n_{1ZB} ... Maximum Cyclic Input RPM
- M_{2N} ... Nominal Torque @ 2000 RPM Input
- $M_{2N(n1DBH)}$ ... Rated Torque @ Maximum Continuous Input RPM Horizontal Mounting - EL1, EL2, EL5, EL6
- M_{2B} ... Acceleration Torque Maximum
- M_{2PEAK} ... Peak Torque

K

"K" Series–Right Angle Helical/Bevel ServoFit® Modular System Selection Data

Part Number	Reducer Ratio i		Input RPM Maximum Continuous		Input RPM Maximum Cyclic	Backlash arcmins	Input Inertia	Torsional Stiffness per arcmin		Output Torque Nominal [2]		Output Torque Acceleration		Output Torque Peak [3]	
							J_1	C_2		$M_{2N \le 2000\ RPM}$		M_{2B}		M_{2PEAK}	
	Nom.	Exact	n_{1DBH}	n_{1DBV}	n_{1ZB}	$\Delta\varphi$ [1]	$kgcm^2$	in.lbs.	Nm	in.lbs.	Nm	in.lbs.	Nm	in.lbs.	Nm
K813 with MT TriAdapt® Motor Adapter Continued														**Noise Level ≤ 65 dB(A)** [4]	
K813_0650 MT30	65.41	188387/2880	2,800	2,500	3,600	10/5	11.5	1,212	136.8	25,155	2,840	41,190	4,650	74,407	8,400
K813_0650 MT40	65.41	188387/2880	2,800	2,500	3,500	10/5	15.5	1,233	139.2	37,204	4,200	41,190	4,650	74,407	8,400
K813_0650 MT50	65.41	188387/2880	2,500	2,500	3,000	10/5	25.5	1,246	140.7	37,204	4,200	41,190	4,650	74,407	8,400
K813_0720 MT30	71.70	10325/144	2,800	2,500	3,600	10/5	10.1	1,218	137.5	23,288	2,629	38,322	4,326	63,869	7,210
K813_0720 MT40	71.70	10325/144	2,800	2,500	3,500	10/5	14.1	1,236	139.5	31,935	3,605	38,322	4,326	63,869	7,210
K813_0720 MT50	71.70	10325/144	2,500	2,500	3,000	10/5	24.1	1,247	140.8	31,935	3,605	38,322	4,326	63,869	7,210
K813_0790 MT30	79.38	45725/576	2,800	2,500	3,600	10/5	9.9	1,225	138.2	25,783	2,911	41,190	4,650	70,731	7,985
K813_0790 MT40	79.38	45725/576	2,800	2,500	3,500	10/5	13.9	1,239	139.9	35,365	3,992	41,190	4,650	70,731	7,985
K813_0790 MT50	79.38	45725/576	2,500	2,500	3,000	10/5	23.9	1,248	140.9	35,365	3,992	41,190	4,650	70,731	7,985
K813_0880 MT30	87.76	7021/80	2,800	2,500	3,600	10/5	8.8	1,229	138.8	23,753	2,682	28,945	3,268	36,182	4,085
K813_0880 MT40	87.76	7021/80	2,800	2,500	3,500	10/5	12.8	1,241	140.1	24,838	2,804	28,945	3,268	36,182	4,085
K813_0970 MT30	97.17	31093/320	2,800	2,500	3,600	10/5	8.7	1,234	139.3	26,298	2,969	32,047	3,618	40,058	4,522
K813_0970 MT40	97.17	31093/320	2,800	2,500	3,500	10/5	12.7	1,243	140.4	27,506	3,105	32,047	3,618	40,058	4,522
K814 with MT TriAdapt® Motor Adapter														**Noise Level ≤ 65 dB(A)** [4]	
K814_0670 MT40	66.83	38763/580	2,800	2,500	3,500	10/6	14.5	1,234	139.3	37,204	4,200	39,644	4,476	49,555	5,594
K814_0740 MT40	73.99	1201653/16240	2,800	2,500	3,500	10/6	14.3	1,237	139.6	37,204	4,200	41,190	4,650	54,864	6,194
K814_0890 MT40	88.89	40887/460	2,800	2,500	3,500	10/6	13.5	1,242	140.2	37,204	4,200	41,190	4,650	62,195	7,021
K814_0980 MT40	98.41	181071/1840	2,800	2,500	3,500	10/6	13.4	1,244	140.4	37,204	4,200	41,190	4,650	68,859	7,774
K814_1130 MT40	112.8	9027/80	2,800	2,500	3,500	10/6	12.9	1,246	140.6	37,204	4,200	41,190	4,650	74,407	8,400
K814_1150 MT30	114.6	329987/2880	2,800	2,500	3,600	10/6	7.7	1,239	139.8	29,076	3,282	31,692	3,578	39,615	4,472
K814_1250 MT40	124.9	279837/2240	2,800	2,500	3,500	10/6	12.8	1,247	140.8	37,204	4,200	41,190	4,650	74,407	8,400
K814_1270 MT30	126.9	1461371/11520	2,800	2,500	3,600	10/6	7.7	1,241	140.1	32,191	3,634	35,087	3,961	43,859	4,951
K814_1390 MT40	139.4	11151/80	2,800	2,500	3,500	10/6	12.5	1,248	140.9	37,204	4,200	41,190	4,650	74,407	8,400
K814_1420 MT30	141.5	135877/960	2,800	2,500	3,600	10/6	7.4	1,243	140.4	30,138	3,402	37,287	4,209	46,608	5,262
K814_1540 MT40	154.3	49383/320	2,800	2,500	3,500	10/6	12.5	1,249	141.0	37,204	4,200	41,190	4,650	74,407	8,400
K814_1570 MT30	156.7	601741/3840	2,800	2,500	3,600	10/6	7.3	1,245	140.6	33,367	3,767	41,190	4,650	51,602	5,825
K814_1710 MT40	170.7	4779/28	2,800	2,500	3,500	10/6	12.3	1,249	141.0	37,204	4,200	41,190	4,650	54,816	6,188
K814_1730 MT30	173.3	2773/16	2,800	2,500	3,600	10/6	7.1	1,246	140.7	31,904	3,602	41,190	4,650	54,810	6,188
K814_1890 MT40	189.0	148149/784	2,800	2,500	3,500	10/6	12.2	1,250	141.1	37,204	4,200	41,190	4,650	60,690	6,851
K814_1920 MT30	191.9	85963/448	2,800	2,500	3,600	10/6	7.1	1,247	140.8	35,323	3,988	41,190	4,650	60,682	6,851
K814_2280 MT40	227.9	18231/80	2,800	2,500	3,500	10/6	12.0	1,251	141.2	37,204	4,200	41,190	4,650	68,593	7,744
K814_2310 MT30	231.4	1999333/8640	2,800	2,500	3,600	10/6	6.9	1,249	141.0	33,726	3,807	41,190	4,650	68,584	7,743
K814_2520 MT40	252.3	565161/2240	2,800	2,500	3,500	10/6	12.0	1,251	141.2	37,204	4,200	41,190	4,650	74,407	8,400
K814_2560 MT30	256.2	8854189/34560	2,800	2,500	3,600	10/6	6.9	1,250	141.1	37,204	4,200	41,190	4,650	74,407	8,400
K814_2770 MT40	276.6	4425/16	2,800	2,500	3,500	10/6	11.9	1,251	141.2	31,935	3,605	38,322	4,326	63,869	7,210
K814_2810 MT30	280.8	485275/1728	2,800	2,500	3,600	10/6	6.8	1,250	141.1	31,935	3,605	38,322	4,326	63,869	7,210
K814_3060 MT40	306.2	137175/448	2,800	2,500	3,500	10/6	11.9	1,251	141.3	35,365	3,992	41,190	4,650	70,731	7,985
K814_3110 MT30	310.9	2149075/6912	2,800	2,500	3,600	10/6	6.8	1,250	141.2	35,365	3,992	41,190	4,650	70,731	7,985

Motor Shaft

Motor Adapter	Max. Shaft Diameter
MT10	19
MT20	24
MT30	38
MT40	48
MT50	60

Housing Styles

N Foot Mounted

F Round Flange

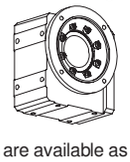

G Tapped Holes

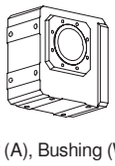

GD Torque Arm Bracket

These Housing Styles are available as Hollow (A), Bushing (W), or Solid (V) Output.

See Page 194 for required ordering information and part number example.

"K" Series–Right Angle Helical/Bevel ServoFit® Modular System Selection Data

STÖBER

Part Number	Reducer Ratio i		Input RPM Maximum Continuous		Input RPM Maximum Cyclic	Backlash arcmins	Input Inertia	Torsional Stiffness per arcmin		Output Torque Nominal [2]		Output Torque Acceleration		Output Torque Peak [3]	
										$M_{2N \le 2000\ RPM}$		M_{2B}		M_{2PEAK}	
	Nom.	Exact	n_{1DBH}	n_{1DBV}	n_{1ZB}	$\Delta\varphi$ [1]	J_1 kgcm²	C_2 in.lbs.	C_2 Nm	in.lbs.	Nm	in.lbs.	Nm	in.lbs.	Nm
K913 with MT TriAdapt® Motor Adapter														**Noise Level ≤ 65 dB(A) [4]**	
K913_0079 MT50	7.934	54839/6912	1,500	1,500	2,500	10/5	351.2	1,232	139.1	21,757	2,456	21,757	2,456	27,197	3,070
K913_0100 MT50	10.12	119133/11776	1,500	1,500	2,500	10/5	248.9	1,417	159.9	26,753	3,020	26,753	3,020	33,441	3,775
K913_0125 MT50	12.53	73749/5888	1,800	1,800	2,800	10/5	186.8	1,545	174.4	32,159	3,631	32,159	3,631	40,199	4,538
K913_0160 MT50	15.91	13237/832	1,800	1,800	2,800	10/5	135.0	1,652	186.5	39,199	4,425	39,199	4,425	48,999	5,532
K913_0190 MT50	19.06	305/16	2,200	2,100	3,000	10/5	108.9	1,711	193.2	45,504	5,137	45,504	5,137	56,880	6,421
K913_0240 MT40	23.94	88877/3712	2,200	2,100	3,100	10/5	73.0	1,585	178.9	28,667	3,236	28,667	3,236	35,834	4,045
K913_0240 MT50	23.94	88877/3712	2,200	2,100	3,000	10/5	83.0	1,764	199.1	54,779	6,184	54,779	6,184	68,474	7,730
K913_0320 MT40	32.12	47275/1472	2,600	2,500	3,400	10/5	50.5	1,697	191.6	36,287	4,097	36,287	4,097	45,359	5,121
K913_0320 MT50	32.12	47275/1472	2,500	2,500	3,000	10/5	60.5	1,806	203.9	60,669	6,849	68,207	7,700	86,676	9,785
K913_0380 MT40	38.04	194773/5120	2,600	2,500	3,400	10/5	40.9	1,742	196.6	41,507	4,686	41,507	4,686	51,884	5,857
K913_0380 MT50	38.04	194773/5120	2,500	2,500	3,000	10/5	50.9	1,822	205.7	62,006	7,000	68,207	7,700	99,144	11,193
K913_0490 MT40	48.94	100223/2048	2,600	2,500	3,400	10/5	30.6	1,788	201.8	50,266	5,675	50,497	5,701	63,122	7,126
K913_0490 MT50	48.94	100223/2048	2,500	2,500	3,000	10/5	40.6	1,838	207.5	62,006	7,000	68,207	7,700	120,618	13,617
K913_0630 MT40	63.07	209901/3328	2,600	2,500	3,400	10/5	23.5	1,817	205.1	51,864	5,855	61,561	6,950	76,952	8,687
K913_0630 MT50	63.07	209901/3328	2,500	2,500	3,000	10/5	33.5	1,848	208.6	62,006	7,000	68,207	7,700	124,012	14,000
K913_0750 MT40	75.00	62403/832	2,600	2,500	3,400	10/5	19.9	1,830	206.6	53,248	6,011	68,207	7,700	88,210	9,958
K913_0750 MT50	75.00	62403/832	2,500	2,500	3,000	10/5	29.9	1,852	209.1	62,006	7,000	68,207	7,700	88,210	9,958
K913_0950 MT40	95.41	293105/3072	2,600	2,500	3,400	10/5	16.4	1,843	208.0	47,620	5,376	57,144	6,451	95,240	10,752
K913_0950 MT50	95.41	293105/3072	2,500	2,500	3,000	10/5	26.4	1,856	209.6	47,620	5,376	57,144	6,451	95,240	10,752
K914 with MT TriAdapt® Motor Adapter														**Noise Level ≤ 65 dB(A) [4]**	
K914_0920 MT40	92.35	2399679/25984	2,600	2,500	3,400	10/5	15.9	1,841	207.9	54,781	6,184	54,781	6,184	68,477	7,730
K914_0940 MT30	93.78	4177219/44544	2,600	2,500	3,400	10/5	10.6	1,819	205.3	25,351	2,862	28,664	3,236	35,831	4,045
K914_1240 MT40	123.9	1276425/10304	2,600	2,500	3,400	10/5	14.3	1,851	208.9	60,960	6,882	68,207	7,700	86,680	9,785
K914_1260 MT30	125.8	2221925/17664	2,600	2,500	3,400	10/5	9.1	1,838	207.5	34,011	3,840	36,284	4,096	45,355	5,120
K914_1470 MT40	146.7	5258871/35840	2,600	2,500	3,400	10/5	13.7	1,854	209.3	62,006	7,000	68,207	7,700	99,147	11,193
K914_1490 MT30	149.0	9154331/61440	2,600	2,500	3,400	10/5	8.5	1,845	208.3	38,782	4,378	41,503	4,685	51,879	5,857
K914_1890 MT40	188.8	2706021/14336	2,600	2,500	3,400	10/5	13.0	1,858	209.7	62,006	7,000	68,207	7,700	120,623	13,617
K914_1920 MT30	191.7	4710481/24576	2,600	2,500	3,400	10/5	7.8	1,852	209.1	40,812	4,607	50,493	5,700	63,116	7,125
K914_2430 MT40	243.3	5667327/23296	2,600	2,500	3,400	10/5	12.5	1,860	210.0	62,006	7,000	68,207	7,700	124,012	14,000
K914_2470 MT30	247.0	3288449/13312	2,600	2,500	3,400	10/5	7.4	1,856	209.6	43,056	4,861	61,556	6,949	76,945	8,687
K914_2940 MT30	293.8	977647/3328	2,600	2,500	3,400	10/5	7.1	1,858	209.8	44,860	5,064	68,207	7,700	88,202	9,957
K914_3740 MT30	373.7	13775935/36864	2,600	2,500	3,400	10/5	6.9	1,860	210.0	46,783	5,281	57,144	6,451	95,240	10,752

[1] Backlash shown "STANDARD/REDUCED".

[2] Maximum torque for continuous input RPM - horizontal output position.

[3] Maximum momentary torque for emergency stops or heavy shock load. Admissible stops per life of reducer = 1,000 stops maximum.

[4] dB(A)Measured at 1 meter distance with 3000 RPM input

Index of Symbols

- i ... Exact Ratio = Exact Tooth Count
- J_1 .... Reducer Inertia
- C ... ServoCool
- C_2 ... Torsional Stiffness
- n_{1DBH} ... Maximum Continuous Input RPM Horizontal Mounting - EL1, 2, 5, 6
- n_{1DBV} ... Maximum Continuous Input RPM Vertical Position - EL3 and EL4
- n_{1ZB} ... Maximum Cyclic Input RPM
- M_{2N} ... Nominal Torque @ 2000 RPM Input
- $M_{2N(n1DBH)}$ ... Rated Torque @ Maximum Continuous Input RPM Horizontal Mounting - EL1, EL2, EL5, EL6
- M_{2B} ... Acceleration Torque Maximum
- M_{2PEAK} ... Peak Torque

K

STÖBER

"K" Series–Right Angle Helical/Bevel ServoFit® Modular System Selection Data

Part Number	Reducer Ratio i		Input RPM Maximum Continuous		Input RPM Maximum Cyclic	Backlash arcmins	Input Inertia	Torsional Stiffness per arcmin		Output Torque Nominal [2]		Output Torque Acceleration		Output Torque Peak [3]	
							J_1	C_2		$M_{2N \le 2000\ RPM}$		M_{2B}		M_{2PEAK}	
	Nom.	Exact	n_{1DBH}	n_{1DBV}	n_{1ZB}	$\Delta\varphi$ [1]	kgcm²	in.lbs.	Nm	in.lbs.	Nm	in.lbs.	Nm	in.lbs.	Nm
K1013 with MT TriAdapt® Motor Adapter														**Noise Level ≤ 65 dB(A)** [4]	
K1013_0079 MT50	7.9	47089/5928	1,500	1,500	2,200	10/5	816.2	1,934	218.4	22,197	2,506	24,417	2,756	35,650	4,025
K1013_0100 MT50	10.0	2077/208	1,500	1,500	2,200	10/5	578.1	2,403	271.2	27,906	3,150	30,697	3,465	44,819	5,060
K1013_0125 MT50	12.5	71393/5720	1,800	1,800	2,500	10/5	411.7	2,827	319.2	34,878	3,938	38,366	4,331	56,017	6,324
K1013_0160 MT50	15.9	37975/2392	1,800	1,800	2,500	10/5	293.3	3,213	362.7	44,366	5,009	48,802	5,509	71,254	8,044
K1013_0190 MT50	18.8	144305/7696	2,100	2,000	2,800	10/5	234.2	3,427	386.9	52,400	5,916	57,640	6,507	84,158	9,501
K1013_0240 MT50	23.8	4949/208	2,100	2,000	2,800	10/5	169.2	3,661	413.3	66,490	7,506	73,139	8,257	106,787	12,055
K1013_0320 MT50	31.5	144305/4576	2,500	2,300	3,000	10/5	117.3	3,847	434.2	71,197	8,038	71,197	8,038	88,996	10,047
K1013_0390 MT50	38.6	8029/208	2,500	2,300	3,000	10/5	90.1	3,934	444.1	83,593	9,437	83,593	9,437	104,491	11,796
K1013_0490 MT50	48.5	171647/3536	2,500	2,300	3,000	10/5	68.2	4,001	451.7	100,084	11,299	100,084	11,299	125,105	14,123
K1013_0620 MT50	61.6	12803/208	2,500	2,300	3,000	10/5	52.2	4,046	456.8	105,349	11,893	116,926	13,200	150,559	16,997
K1013_0750 MT50	75.3	101773/1352	2,500	2,300	3,000	10/5	42.6	4,071	459.6	100,417	11,336	116,926	13,200	175,501	19,813
K1013_0940 MT50	94.3	235445/2496	2,500	2,300	3,000	10/5	35.1	4,090	461.7	82,844	9,352	87,608	9,890	109,510	12,363
K1014 with MT TriAdapt® Motor Adapter														**Noise Level ≤ 65 dB(A)** [4]	
K1014_0930 MT50	93.3	252399/2704	2,500	2,300	3,000	10/5	32.7	4,089	461.6	95,723	10,806	113,260	12,786	141,576	15,983
K1014_1220 MT40	121.6	556605/4576	2,500	2,300	3,200	10/5	18.4	4,062	458.5	70,302	7,937	71,200	8,038	89,000	10,047
K1014_1240 MT50	123.7	7359555/59488	2,500	2,300	3,000	10/5	29.3	4,104	463.3	106,296	12,000	116,926	13,200	177,477	20,036
K1014_1490 MT40	148.9	30969/208	2,500	2,300	3,200	10/5	16.5	4,082	460.8	74,065	8,361	83,596	9,437	104,495	11,797
K1014_1510 MT50	151.4	409479/2704	2,500	2,300	3,000	10/5	27.5	4,110	464.0	106,296	12,000	116,926	13,200	208,376	23,524
K1014_1870 MT40	187.2	662067/3536	2,500	2,300	3,200	10/5	15.1	4,097	462.5	78,043	8,811	100,087	11,299	125,108	14,124
K1014_1900 MT50	190.4	514941/2704	2,500	2,300	3,000	10/5	26.1	4,115	464.5	106,296	12,000	116,926	13,200	212,592	24,000
K1014_2370 MT40	237.4	49383/208	2,500	2,300	3,200	10/5	14.0	4,106	463.6	81,994	9,256	116,926	13,200	150,564	16,998
K1014_2900 MT40	290.4	392553/1352	2,500	2,300	3,200	10/5	13.3	4,112	464.2	84,369	9,525	116,926	13,200	175,508	19,813

Motor Shaft

Motor Adapter	Max. Shaft Diameter
MT10	19
MT20	24
MT30	38
MT40	48
MT50	60

Housing Styles

N Foot Mounted

F Round Flange

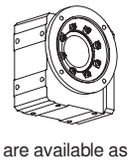

G Tapped Holes

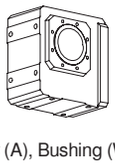

GD Torque Arm Bracket

These Housing Styles are available as Hollow (A), Bushing (W), or Solid (V) Output.

See Page 194 for required ordering information and part number example.

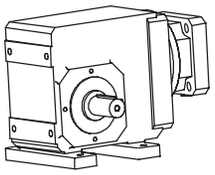

ServoFit® "K" Series–Helical/Bevel Foot Mount – "N" Housing Shaft Output – Dimensional Data

STÖBER

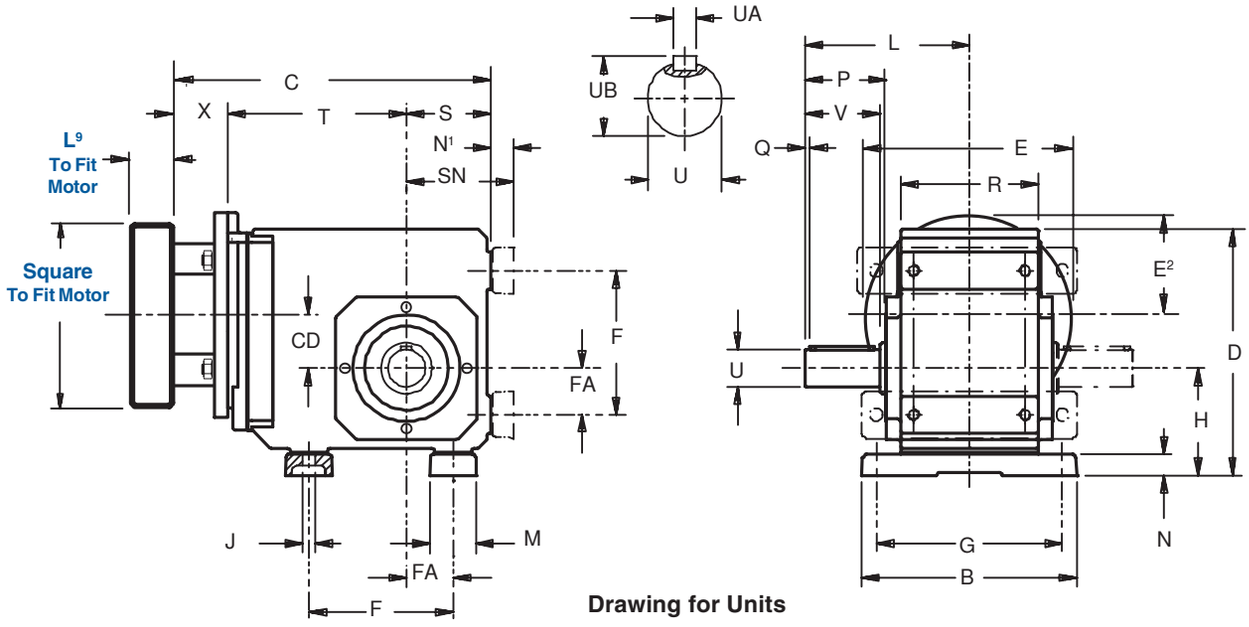

Drawing for Units
K102VN — K403VN

Table No. 1 **"K" Series – Foot Mounting Unit Dimensions (Inches) – "N" Housing Style**

Base Module	B	D	F	G	H	J	L	M	N	O	P	Q	R	S	V	Z¹	BO	FA	N¹	SN
K102	5.51	6.81	3.54[1)]	4.53	2.95	.35	4.53	1.18	.51	–	2.32	.16	3.54	2.36	1.97	–	–	1.18	.59	2.95
K202/203	7.28	8.39	4.53	6.10	3.46	.43	5.31	1.57	.79	–	2.56	.16	4.53	2.56	2.36	–	–	1.38	.91	3.46
K302/303	7.87	9.29	5.12	6.69	3.86	.43	5.59	1.77	.79	–	2.60	.16	5.12	2.95	2.36	–	–	1.57	.91	3.86
K402/403	9.06	10.43	6.10	7.87	4.53	.55	6.93	1.97	.87	–	3.39	.16	5.83	3.54	2.76	–	–	1.97	.98	4.53
K513/514	9.45	11.42	5.51	7.87	7.48	.71	8.74	2.36	1.06	5.10	3.90	.16	6.30	3.94	3.54	5.98	7.28	1.57	1.18	5.12
K613/614	9.84	13.39	6.30	8.27	8.66	.71	9.29	2.56	1.06	5.35	4.31	.16	6.61	4.72	3.94	6.77	7.87	1.97	1.18	5.91
K713/714	11.42	14.96	7.09	9.45	9.84	.87	10.91	2.76	1.38	6.46	5.14	.16	7.48	4.92	4.72	7.52	8.90	2.17	1.50	6.42
K813/814	14.17	17.91	9.45	11.81	12.20	1.02	12.83	3.35	1.61	7.28	5.94	.20	9.25	5.71	5.51	8.11	11.10	2.95	1.77	7.48
K913/914	16.93	21.46	11.02	14.17	14.37	1.30	15.16	3.74	1.81	8.66	7.13	.31	11.22	7.09	6.69	9.84	12.99	3.74	1.97	9.06
K1013/1014	15.75	23.27	13.78	12.99	14.76	1.54	16.46	4.72	1.77	9.45	8.66	.59	15.75	–	8.27	12.01	14.02	4.53	1.77	8.86

[1)] Mounting holes are also located on Side 1 of the K1 unit ONLY.

Table No. 2 **Metric and Stainless Output available on request. Contact STOBER Drives for delivery.**

	Standard Shaft — inches			Metric Shaft —mm			Stainless Shaft	
Base Module	U	UA — Key	UB	U	UA — Key	UB	Inches	mm
K102	1.000$_{h6}$	$^1/_4 \times ^1/_4 \times 1^9/_{16}$	1.11	25$_{k6}$	M8 ×7×40	28	1.000	25
K202/203	1.250$_{h6}$	$^1/_4 \times ^1/_4 \times 1^{15}/_{16}$	1.36	30$_{k6}$	M8 ×7×50	33	1.250	30
K302/303	1.250$_{h6}$	$^1/_4 \times ^1/_4 \times 1^{15}/_{16}$	1.36	30$_{k6}$	M8 ×7×50	33	1.250	40
K402/403	1.375$_{h6}$	$^5/_{16} \times ^5/_{16} \times 2^5/_{16}$	1.51	40$_{k6}$	M12 ×8×70	43	1.375	—
K513/514	1.750$_{h6}$	$^3/_8 \times ^3/_8 \times 3^5/_{32}$	1.92	45$_{k6}$	M14 ×9×80	48.5	1.750	45
K613/614	1.750$_{h6}$	$^3/_8 \times ^3/_8 \times 3^5/_{32}$	1.92	50$_{k6}$	M14 ×9×90	53.5	1.750	—
K713/714	2.375$_{h6}$	$^5/_8 \times ^5/_8 \times 3^{15}/_{16}$	2.65	60$_{k6}$	M18 ×11×110	64	2.375	—
K813/814	2.875$_{h6}$	$^3/_4 \times ^3/_4 \times 4^5/_{16}$	3.21	70$_{m6}$	M20 ×12×125	74.5	2.875	70
K913/914	3.625$_{h6}$	$^7/_8 \times ^7/_8 \times 5^1/_2$	4.01	90$_{m6}$	M25 ×14×140	95	—	90
K1013/1014	4.375$_{h6}$	$1 \times 1 \times 7^1/_8$	4.82	110$_{m6}$	M28 ×16×180	116	—	—

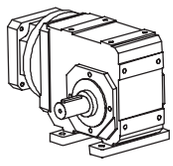

K1 Housing with tapped holes on Side 1, Side 2, and Side 5. Shown EL1 with mounting feet on Side 1.

K

For approximate weight, add adapter weight from Table 3 and base module weight from Table 4.

Part No. Example
Foot Mounting with TriAdapt® Motor Adapter
K303VN0650 MT20

ServoFit® "K" Series–Helical/Bevel Foot Mount – "N" Housing Shaft Output – Dimensional Data

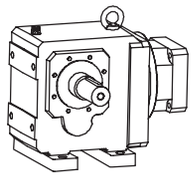

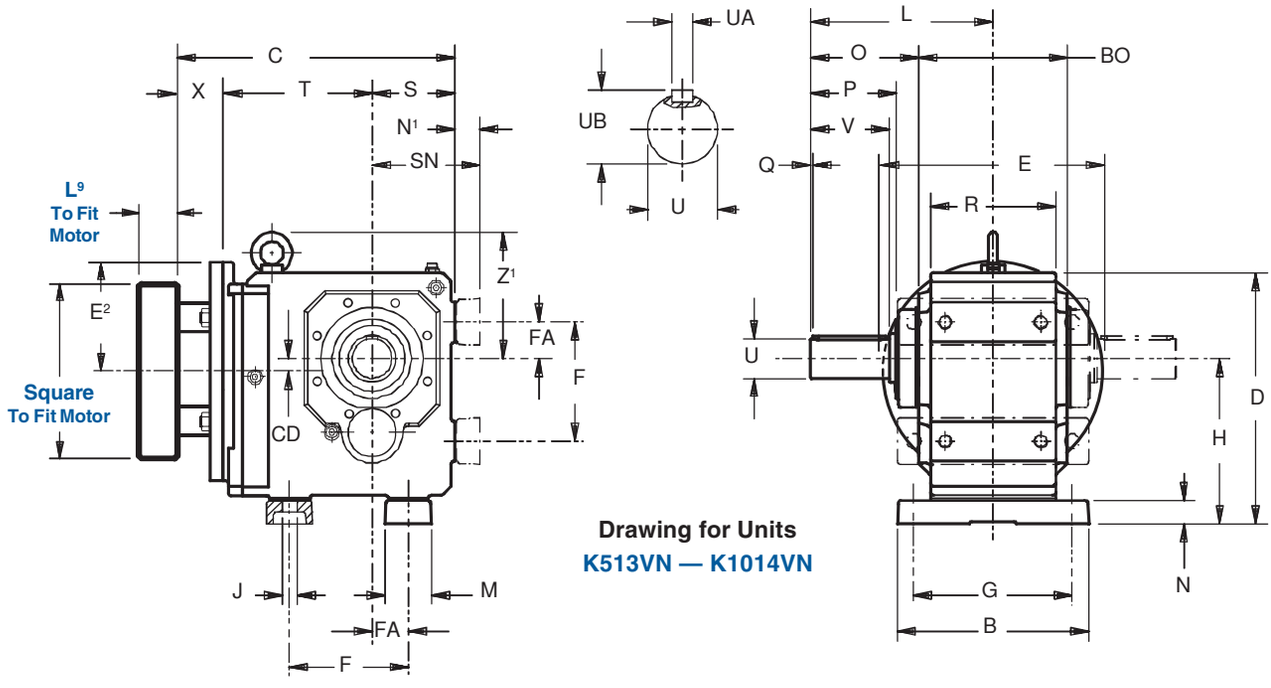

Drawing for Units
K513VN — K1014VN

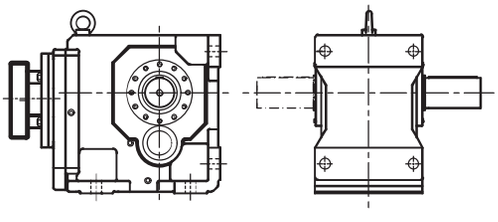

Mounting feet are integral on the K10 housing.

Table No. 3 "MT" Motor Plate Dimensions

Motor Adapter	Motor Shaft D⁶ Max. [1]		Motor Plate [2] Thickness L⁹ Minimum		Inches			Wt. lbs.
	mm	ins.	mm	inches	E	E²	X	
MT10	19	.748	21	.83	5.51	2.75	1.57	5
MT20	24	.945	24	.95	6.30	3.15	1.97	8
MT30	38	1.260	25	.98	7.87	3.94	2.36	12
MT40	48	1.890	33	1.30	9.84	4.92	3.50	18
MT50	60	2.362	43	1.69	11.81	5.91	3.21	16

[1] If an adapter bushing is required it will be supplied as a component of the motor mounting plate.
[2] Motor plate maximum thickness (L⁹) will vary with motor shaft length but will not be less than shown.

Table No. 4

"K" Series – Foot Mounting Unit Dimensions (Inches) – "N" Housing Style

Base	MT10			MT20			MT30			MT40			MT50			Wt.
Module	CD	C	T	CD	C	T	CD	C	T	CD	C	T	CD	C	T	lbs.
K102	1.42	9.40	4.88	1.42	9.96	5.04	–	–	–	–	–	–	–	–	–	31
K202	1.81	9.76	5.63	1.81	10.32	5.79	1.81	10.79	5.87	–	–	–	–	–	–	40
K203	1.81	11.22	7.09	–	–	–	–	–	–	–	–	–	–	–	–	53
K302	2.07	10.94	6.42	2.07	11.49	6.57	2.07	11.96	6.65	–	–	–	–	–	–	67
K303	2.07	12.39	7.87	.63	13.19	8.27	–	–	–	–	–	–	–	–	–	73
K402	–	–	–	2.36	12.87	7.36	2.36	13.34	7.44	2.36	14.60	7.56	–	–	–	93
K403	2.36	13.77	8.66	.91	14.57	9.06	–	–	–	–	–	–	–	–	–	100
K513	–	–	–	.59	12.68	6.77	.59	13.15	6.85	.59	14.41	6.97	–	–	–	106
K514	–	–	–	.59	14.37	8.46	–	–	–	–	–	–	–	–	–	109
K613	–	–	–	.71	14.21	7.52	.71	14.68	7.60	.71	15.94	7.72	.71	11.48	8.27	170
K614	–	–	–	.71	15.90	9.21	–	–	–	–	–	–	–	–	–	177
K713	–	–	–	–	–	–	.79	15.98	8.70	.79	17.24	8.82	.79	12.54	9.33	221
K714	–	–	–	.79	17.24	10.35	.79	18.42	11.14	–	–	–	–	–	–	234
K813	–	–	–	–	–	–	.94	17.79	9.72	.94	19.01	9.80	.94	13.52	10.31	309
K814	–	–	–	–	–	–	.94	20.20	12.13	–	–	–	–	–	–	331
K913	–	–	–	–	–	–	–	–	–	.98	22.16	11.57	.98	15.30	12.09	508
K914	–	–	–	–	–	–	.98	23.35	13.90	.98	24.96	14.37	–	–	–	530
K1013	–	–	–	–	–	–	–	–	–	–	–	–	1.10	27.50	15.43	1,055
K1014	–	–	–	–	–	–	–	–	–	1.10	30.08	17.72	1.10	30.77	18.70	1,079

K

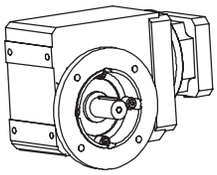

ServoFit® "K" Series–Helical/Bevel Round Flange – "F" Housing Shaft Output – Dimensional Data

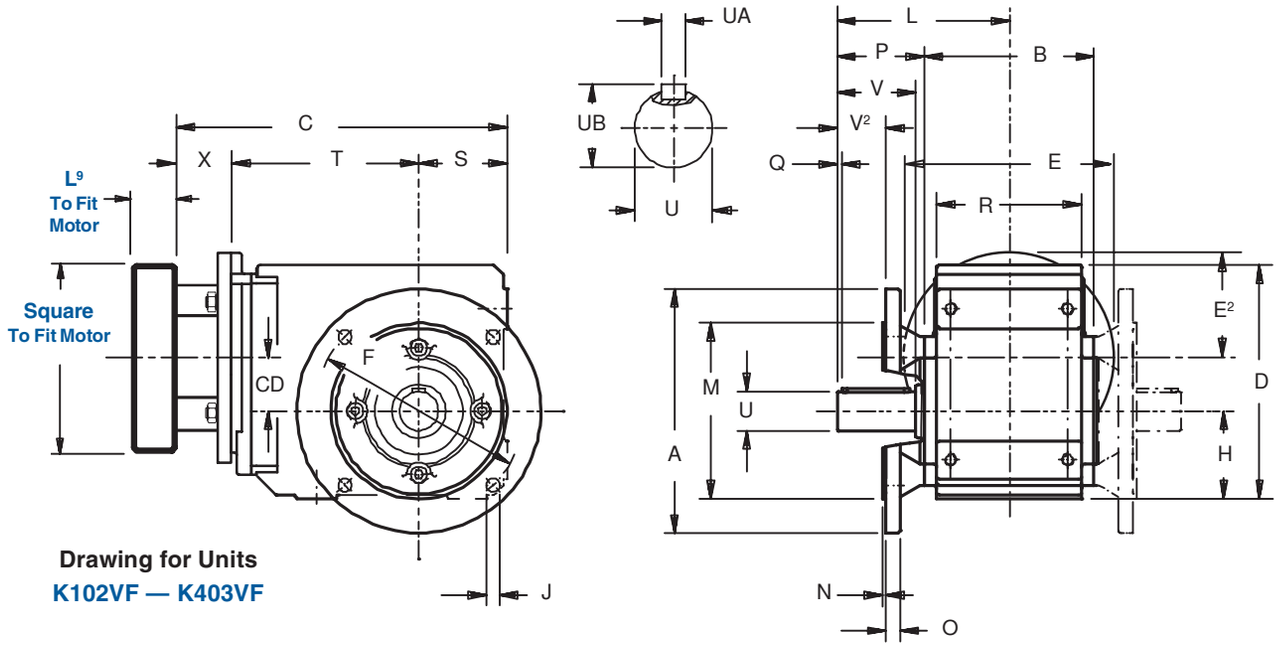

Drawing for Units
K102VF — K403VF

Table No. 1 "K" Series – Round Flange Unit Dimensions (Inches) – "F" Housing Style

Base Module	A	B	D	F	H	J	L	M	N	O	P	Q	R	S	V	V²	Z¹
K102	6.30	4.17	6.30	5.12	2.36	.35	4.53	4.331 +.001/-.0004	.14	.39	2.44	.16	3.54	2.36	1.97	1.18	–
K202/203	7.87	5.28	7.48	6.50	2.56	.43	5.31	5.118 +.001/-.0004	.14	.47	2.68	.16	4.53	2.56	2.36	1.42	–
K302/303	7.87	5.75	8.39	6.50	2.95	.43	5.59	5.118 +.001/-.0004	.14	.55	2.72	.16	5.12	2.95	2.36	1.22	–
K402/403	9.84	6.81	9.45	8.46	3.54	.55	6.93	7.087 +.001/-.0004	.16	.59	3.52	.16	5.83	3.54	2.76	1.95	–
K513/514	9.84	7.28	10.24	8.46	6.30	.55	8.74	7.087 +.001/-.0004	.16	.59	5.10	.16	6.30	3.94	3.54	–	5.98
K613/614	11.81	7.87	12.20	10.43	7.48	.55	9.29	9.055 +.001/-.001	.16	.67	5.35	.16	6.61	4.72	3.94	–	6.77
K713/714	13.78	8.90	13.46	11.81	8.35	.71	10.91	9.842 +.000/-.001	.20	.71	6.46	.16	7.48	4.92	4.72	–	7.52
K813/814	15.75	11.10	16.14	13.78	10.43	.71	12.83	11.811 +.000/-.001	.20	.79	7.28	.20	9.25	5.71	5.51	–	8.11
K913/914	17.72	12.99	19.49	15.75 *	12.40	.71	15.16	13.780 +.000/-.001	.20	.91	8.66	.31	11.22	7.09	6.69	–	9.84
K1013/K1014	21.65	14.02	23.27	19.69 *	14.76	.71	18.35	17.716 +.000/-.002	.20	.98	11.34	.59	15.75	8.86	8.27	–	12.01

* K913 thru K1014 has 8 mounting holes in the output flange instead of 4 as shown in drawing.

Table No. 2 **Metric and Stainless Output available on request. Contact STOBER Drives for delivery.**

	Standard Shaft — inches			Metric Shaft —mm			Stainless Shaft	
Base Module	U	UA—Key	UB	U	UA—Key	UB	Inches	mm
K102	1.000_{h6}	$^1/_4 \times ^1/_4 \times 1^9/_{16}$	1.11	25_{k6}	M8 ×7×40	28	1.000	25
K202/203	1.250_{h6}	$^1/_4 \times ^1/_4 \times 1^{15}/_{16}$	1.36	30_{k6}	M8 ×7×50	33	1.250	30
K302/303	1.250_{h6}	$^1/_4 \times ^1/_4 \times 1^{15}/_{16}$	1.36	30_{k6}	M8 ×7×50	33	1.250	40
K402/403	1.375_{h6}	$^5/_{16} \times ^5/_{16} \times 2^5/_{16}$	1.51	40_{k6}	M12 ×8×70	43	1.375	—
K513/514	1.750_{h6}	$^3/_8 \times ^3/_8 \times 3^5/_{32}$	1.92	45_{k6}	M14 ×9×80	48.5	1.750	45
K613/614	1.750_{h6}	$^3/_8 \times ^3/_8 \times 3^5/_{32}$	1.92	50_{k6}	M14 ×9×90	53.5	1.750	—
K713/714	2.375_{h6}	$^5/_8 \times ^5/_8 \times 3^{15}/_{16}$	2.65	60_{k6}	M18 ×11×110	64	2.375	—
K813/814	2.875_{h6}	$^3/_4 \times ^3/_4 \times 4^5/_{16}$	3.21	70_{m6}	M20 ×12×125	74.5	2.875	70
K913/914	3.625_{h6}	$^7/_8 \times ^7/_8 \times 5^1/_2$	4.01	90_{m6}	M25 ×14×140	95	—	90
K1013/1014	4.375_{h6}	$1 \times 1 \times 7^1/_8$	4.82	110_{m6}	M28 ×16×180	116	—	—

Part No. Example
Round Flange with TriAdapt® Motor Adapter
K303VF0650 MT20

For approximate weight, add adapter weight from Table 3 and base module weight from Table 4.

ServoFit® "K" Series–Helical/Bevel Round Flange – "F" Housing Shaft Output – Dimensional Data

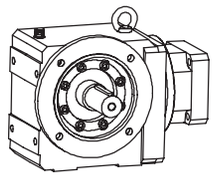

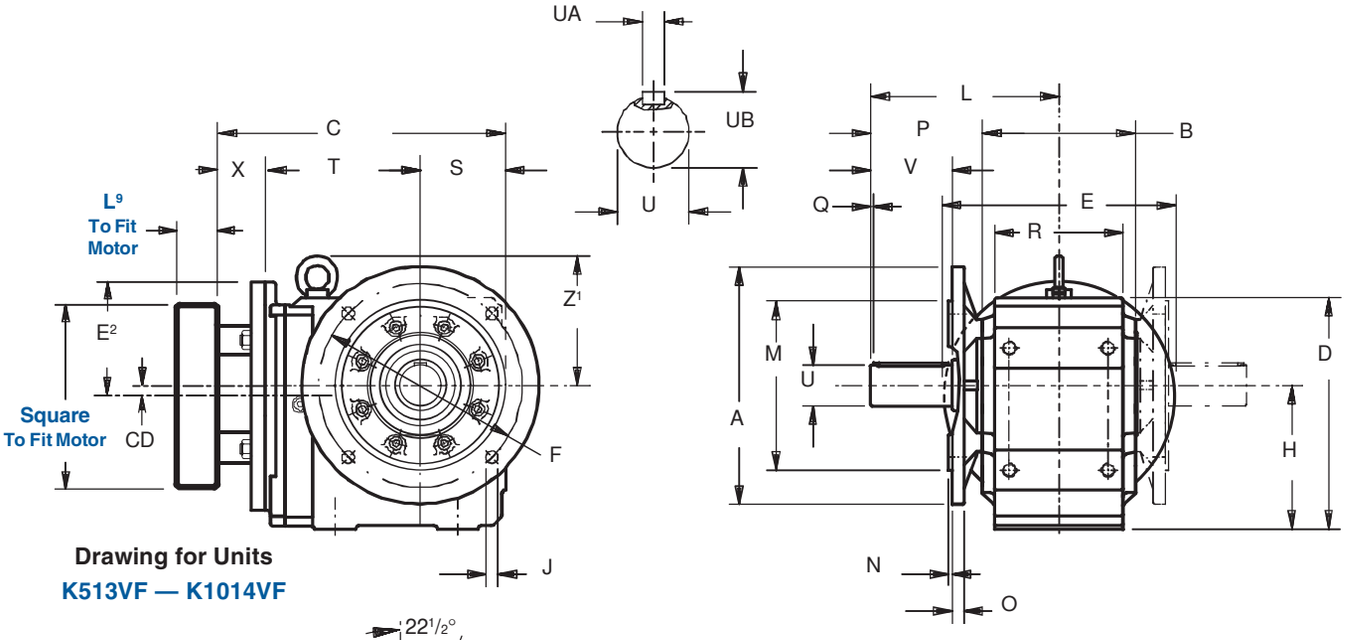

Drawing for Units
K513VF — K1014VF

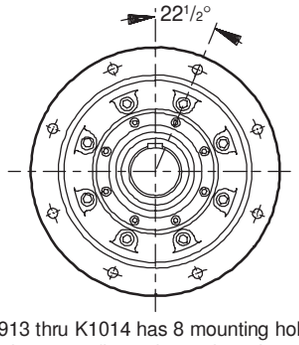

K913 thru K1014 has 8 mounting holes in the output flange located as shown.

Table No. 3 "MT" Motor Plate Dimensions

Motor Adapter	Motor Shaft D6 Max. 1)		Motor Plate 2) Thickness L9 Minimum		Inches			Wt. lbs.
	mm	ins.	mm	inches	E	E2	X	
MT10	19	.748	21	.83	5.51	2.75	1.57	5
MT20	24	.945	24	.95	6.30	3.15	1.97	8
MT30	38	1.260	25	.98	7.87	3.94	2.36	12
MT40	48	1.890	33	1.30	9.84	4.92	3.50	18
MT50	60	2.362	43	1.69	11.81	5.91	3.21	16

1) If an adapter bushing is required it will be supplied as a component of the motor mounting plate.
2) Motor plate maximum thickness (L9) will vary with motor shaft length but will not be less than shown.

Table No. 4

"K" Series – Flange Mounting Unit Dimensions (Inches) – "F" Housing Style

Base Module	MT10			MT20			MT30			MT40			MT50			Wt. lbs.
	CD	C	T	CD	C	T	CD	C	T	CD	C	T	CD	C	T	
K102	1.42	9.40	4.88	1.42	9.96	5.04	–	–	–	–	–	–	–	–	–	31
K202	1.81	9.76	5.63	1.81	10.32	5.79	1.81	10.79	5.87	–	–	–	–	–	–	40
K203	1.81	11.22	7.09	–	–	–	–	–	–	–	–	–	–	–	–	53
K302	2.07	10.94	6.42	2.07	11.49	6.57	2.07	11.96	6.65	–	–	–	–	–	–	67
K303	2.07	12.39	7.87	.63	13.19	8.27	–	–	–	–	–	–	–	–	–	73
K402	–	–	–	2.36	12.87	7.36	2.36	13.34	7.44	2.36	14.60	7.56	–	–	–	93
K403	2.36	13.77	8.66	.91	14.57	9.06	–	–	–	–	–	–	–	–	–	100
K513	–	–	–	.59	12.68	6.77	.59	13.15	6.85	.59	14.41	6.97	–	–	–	106
K514	–	–	–	.59	14.37	8.46	–	–	–	–	–	–	–	–	–	109
K613	–	–	–	.71	14.21	7.52	.71	14.68	7.60	.71	15.94	7.72	.71	11.48	8.27	170
K614	–	–	–	.71	15.90	9.21	–	–	–	–	–	–	–	–	–	177
K713	–	–	–	–	–	–	.79	15.98	8.70	.79	17.24	8.82	.79	12.54	9.33	221
K714	–	–	–	.79	17.24	10.35	.79	18.42	11.14	–	–	–	–	–	–	234
K813	–	–	–	–	–	–	.94	17.79	9.72	.94	19.01	9.80	.94	13.52	10.31	309
K814	–	–	–	–	–	–	.94	20.20	12.13	–	–	–	–	–	–	331
K913	–	–	–	–	–	–	–	–	–	.98	22.16	11.57	.98	15.30	12.09	508
K914	–	–	–	–	–	–	.98	23.35	13.90	.98	24.96	14.37	–	–	–	530
K1013	–	–	–	–	–	–	–	–	–	–	–	–	1.10	27.50	15.43	1,055
K1014	–	–	–	–	–	–	–	–	–	1.10	30.08	17.72	1.10	30.77	18.70	1,079

K

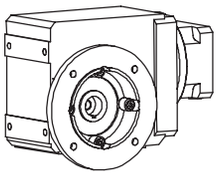

ServoFit® "K" Series–Helical/Bevel Round Flange – "F" Housing Hollow Output – Dimensional Data

STÖBER

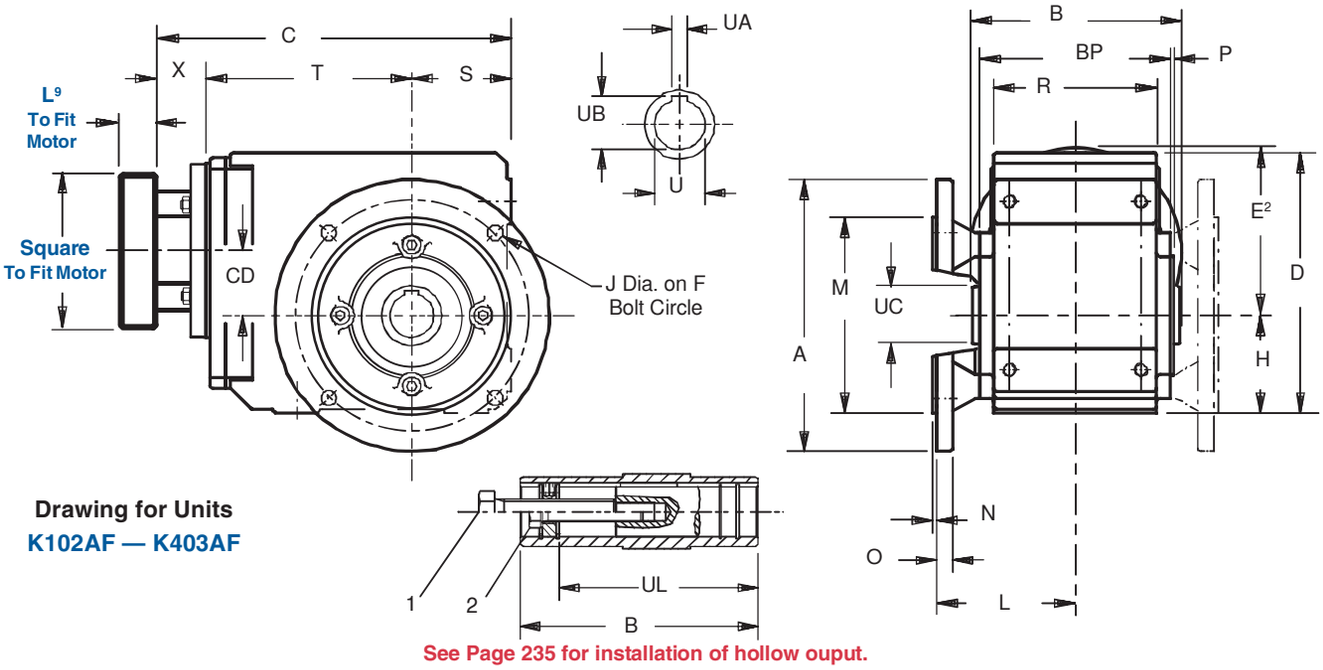

Drawing for Units
K102AF — K403AF

See Page 235 for installation of hollow ouput.

Table No. 1 "K" Series – Hollow Output, Round Flange Unit Dimensions (Inches) – "F" Housing Style

Base Module	A	B	D	F	H	J	L	M	N	O	P	R	S	Z_1	BP	UC	UL
K102	6.30	4.72	6.30	5.12	2.36	.35	3.35	4.331 +.001/-.0004	.14	.39	.12	3.54	2.36	–	4.17	1.57	3.86
K202/203	7.87	5.83	7.48	6.50	2.56	.43	3.90	5.118 +.001/-.0004	.14	.47	.12	4.53	2.56	–	5.28	1.77	4.78
K302/303	7.87	6.30	8.39	6.50	2.95	.43	4.37	5.118 +.001/-.0004	.14	.55	.12	5.12	2.95	–	5.75	1.97	4.92
K402/403	9.84	7.40	9.45	8.46	3.54	.55	4.98	7.087 +.001/-.0004	.16	.59	.14	5.83	3.54	–	6.81	2.17	6.18
K513/514	9.84	7.87	10.24	8.46	6.30	.55	5.20	7.087 +.001/-.0004	.16	.59	.14	6.30	3.94	5.98	7.28	2.56	6.46
K613/614	11.81	8.46	12.20	10.43	7.48	.55	5.35	9.055 +.001/-.001	.16	.67	.14	6.61	4.72	6.77	7.87	2.76	7.05
K713/714	13.78	9.53	13.46	11.81	8.35	.71	6.18	9.842 +.000/-.001	.20	.71	.14	7.48	4.92	7.52	8.90	3.35	8.43
K813/814	15.75	11.81	16.14	13.78	10.43	.71	7.32	11.811 +.000/-.001	.20	.79	.16	9.25	5.71	8.11	11.10	3.94	10.35
K913/914	17.72	13.78	19.49	15.75	12.40	.71	8.46	13.780 +.000/-.001	.20	.91	.20	11.22	7.09	9.84	12.99	4.33	12.32
K1013/K1014	21.65	16.14	23.27	19.69	14.76	.71	10.08	17.716 +.000/-.002	.20	.98	.28	15.75	8.86	12.01	15.60	5.12	14.25

1. Removal Bolt – not supplied. See Page 235.
2. Mounting Bolt – must be smaller than removal bolt.

Table No. 2

Metric and Stainless Output available on request. Contact STOBER Drives for delivery.

	Standard Bore - Inches			Metric Bore - mm			Stainless Bore	
Base Module	U	UA	UB	U	UA	UB	Inches	mm
K102	1.000G7	.250	1.11	25H7	8JS9	28.3	1.000	25
K202/203	1.1875G7	.250	1.31	30H7	8JS9	33.3	1.1875, 1.125, 1.25	30
K302/303	1.375G7	.312	1.52	35H7	10JS9	38.3	1.25, 1.375	35
K402/403	1.500G7	.375	1.67	40H7	12JS9	43.3	1.500	40
K513/514	2.000G7	.500	2.13	50H7	14JS9	53.8	2.000	40, 50
K613/614	2.000G7	.500	2.23	50H7	14JS9	53.8	1.4375, 1.9375, 2.000	40, 50, 60
K713/714	2.375G7	.625	2.66	60H7	18JS9	64.4	—	60
K813/814	2.750G7	.625	3.03	70H7	20JS9	74.9	2.1875, 2.375, 2.6875, 2.750	60, 70
K913/914	3.250G7	.750	3.59	90H7	25JS9	95.4	2.6875, 2.9375, 3.000, 3.4375	90
K1013/K1014	4.000G7	1.000	4.31	100H7	28JS9	116	—	—

Part No. Example

Round Flange with TriAdapt® Motor Adapter

K303AF0650 MT20

For approximate weight, add adapter weight from Table 3 and base module weight from Table 4.

ServoFit® "K" Series–Helical/Bevel Round Flange – "F" Housing Hollow Output – Dimensional Data

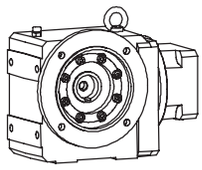

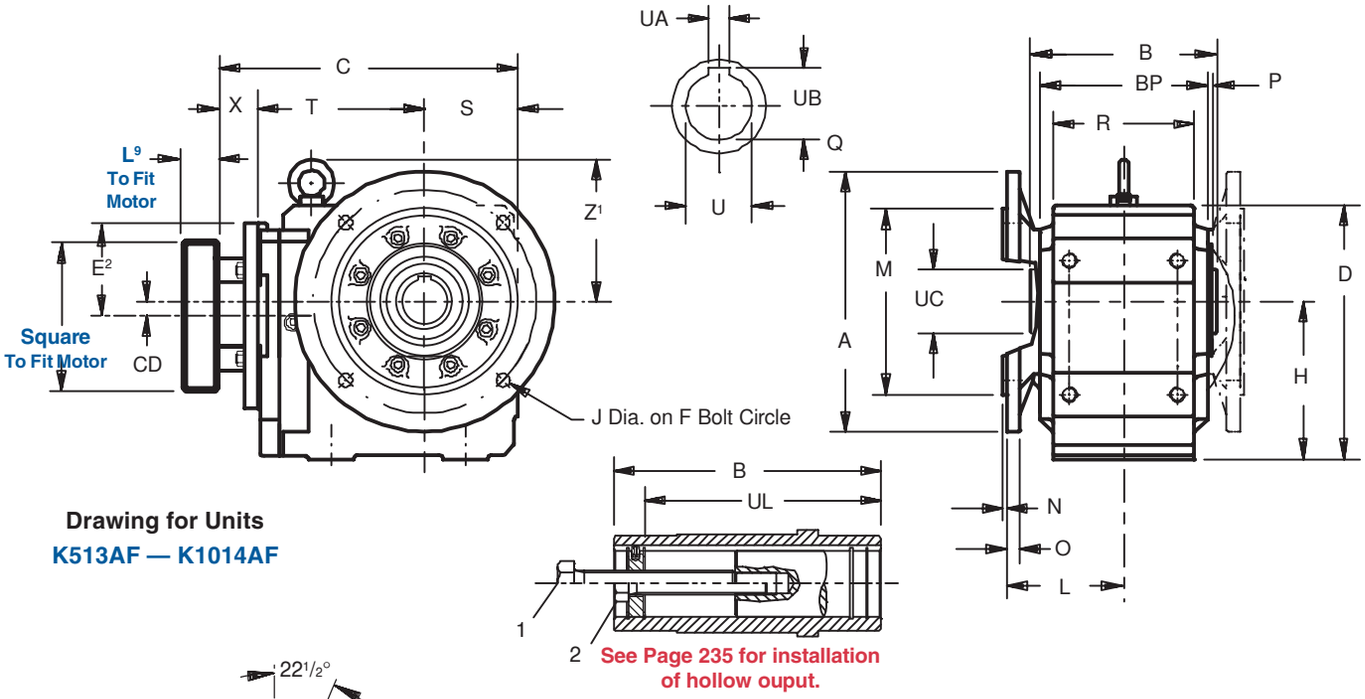

Drawing for Units
K513AF — K1014AF

See Page 235 for installation of hollow ouput.

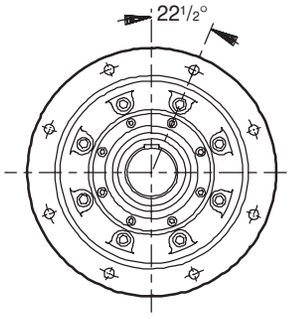

K913 thru K1014 has 8 mounting holes in the output flange located as shown.

Table No. 3 "MT" Motor Plate Dimensions

Motor Adapter	Motor Shaft D6 Max. 1)		Motor Plate 2) Thickness		Inches			Wt. lbs.
			L9 Minimum					
	mm	ins.	mm	inches	E	E2	X	
MT10	19	.748	21	.83	5.51	2.75	1.57	5
MT20	24	.945	24	.95	6.30	3.15	1.97	8
MT30	38	1.260	25	.98	7.87	3.94	2.36	12
MT40	48	1.890	33	1.30	9.84	4.92	3.50	18
MT50	60	2.362	43	1.69	11.81	5.91	3.21	16

1) If an adapter bushing is required it will be supplied as a component of the motor mounting plate.
2) Motor plate maximum thickness (L9) will vary with motor shaft length but will not be less than shown.

Table No. 4

"K" Series – Flange Mounting Unit Dimensions (Inches) – "F" Housing Style

Base Module	MT10			MT20			MT30			MT40			MT50			Wt. lbs.
	CD	C	T	CD	C	T	CD	C	T	CD	C	T	CD	C	T	
K102	1.42	9.40	4.88	1.42	9.96	5.04	–	–	–	–	–	–	–	–	–	31
K202	1.81	9.76	5.63	1.81	10.32	5.79	1.81	10.79	5.87	–	–	–	–	–	–	40
K203	1.81	11.22	7.09	–	–	–	–	–	–	–	–	–	–	–	–	53
K302	2.07	10.94	6.42	2.07	11.49	6.57	2.07	11.96	6.65	–	–	–	–	–	–	67
K303	2.07	12.39	7.87	.63	13.19	8.27	–	–	–	–	–	–	–	–	–	73
K402	–	–	–	2.36	12.87	7.36	2.36	13.34	7.44	2.36	14.60	7.56	–	–	–	93
K403	2.36	13.77	8.66	.91	14.57	9.06	–	–	–	–	–	–	–	–	–	100
K513	–	–	–	.59	12.68	6.77	.59	13.15	6.85	.59	14.41	6.97	–	–	–	106
K514	–	–	–	.59	14.37	8.46	–	–	–	–	–	–	–	–	–	109
K613	–	–	–	.71	14.21	7.52	.71	14.68	7.60	.71	15.94	7.72	.71	11.48	8.27	170
K614	–	–	–	.71	15.90	9.21	–	–	–	–	–	–	–	–	–	177
K713	–	–	–	–	–	–	.79	15.98	8.70	.79	17.24	8.82	.79	12.54	9.33	221
K714	–	–	–	.79	17.24	10.35	.79	18.42	11.14	–	–	–	–	–	–	234
K813	–	–	–	–	–	–	.94	17.79	9.72	.94	19.01	9.80	.94	13.52	10.31	309
K814	–	–	–	–	–	–	.94	20.20	12.13	–	–	–	–	–	–	331
K913	–	–	–	–	–	–	–	–	–	.98	22.16	11.57	.98	15.30	12.09	508
K914	–	–	–	–	–	–	.98	23.35	13.90	.98	24.96	14.37	–	–	–	530
K1013	–	–	–	–	–	–	–	–	–	–	–	–	1.10	27.50	15.43	1,055
K1014	–	–	–	–	–	–	–	–	–	1.10	30.08	17.72	1.10	30.77	18.70	1,079

K

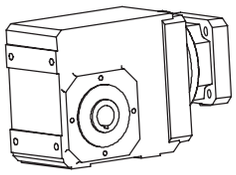

ServoFit® "K" Series–Helical/Bevel Tapped Hole – "G" Housing Hollow Output – Dimensional Data

STÖBER

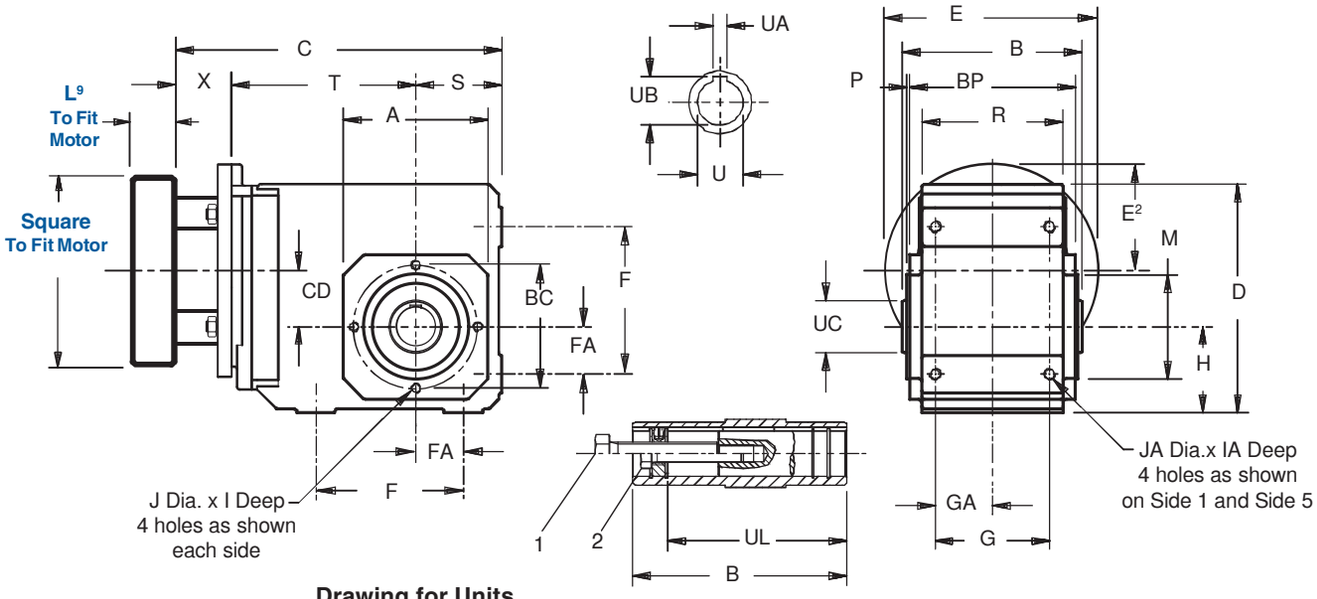

Drawing for Units
K102AG — K403AG

See Page 235 for installation of hollow ouput.

Table No. 1 **"K" Series – Tapped Hole Unit Dimensions (Inches) – "G" Housing Style**

Base Module	A	B	D	F	G	H	I	J	M	P	R	S	Z[1]	BC	BP	FA	GA	IA	JA
K102	4.13	4.72	6.30	3.54	2.76	2.36	.51	4-M8	2.953 +.001/-.0003	.12	3.54	2.36	–	3.54	4.17	1.18	1.38	.51	M8
K202/203	4.57	5.83	7.48	4.53	3.54	2.56	.51	4-M8	3.228 +.001/-.0004	.12	4.53	2.56	–	3.94	5.28	1.38	1.77	.63	M10
K302/303	5.20	6.30	8.39	5.12	4.13	2.95	.51	4-M8	3.740 +.001/-.0004	.12	5.12	2.95	–	4.53	5.75	1.57	2.07	.63	M10
K402/403	5.98	7.40	9.45	6.10	4.72	3.54	.63	4-M10	4.331 +.001/-.0004	.14	5.83	3.54	–	5.12	6.81	1.97	2.36	.75	M12
K513/514	5.71	7.87	10.24	5.51	4.92	6.30	.63	8-M10	4.331 +.001/-.0004	.14	6.30	3.94	5.98	5.12	7.28	1.57	2.46	1.02	M16
K613/614	7.09	8.46	12.20	6.30	5.12	7.48	.63	8-M10	5.512 +.001/-.0004	.14	6.61	4.72	6.77	6.50	7.87	1.97	2.56	1.02	M16
K713/714	7.68	9.53	13.46	7.09	5.71	8.35	.75	8-M12	6.102 +.001/-.0004	.14	7.48	4.92	7.52	7.28	8.90	2.17	2.85	1.22	M20
K813/814	8.90	11.81	16.14	9.45	7.28	10.43	.75	8-M12	7.283 +.001/-.001	.16	9.25	5.71	8.11	8.46	11.10	2.95	3.64	1.50	M24
K913/914	11.02	13.78	19.49	11.02	8.86	12.40	1.02	8-M16	9.055 +.001/-.001	.20	11.22	7.09	9.84	10.43	12.99	3.74	4.43	1.89	M30
K1013/K1014	13.38	16.14	23.27	11.81	12.99	14.76	1.30	10-M20	9.843 +.001/-.001	.28	15.59	8.86	12.01	11.81	15.60	4.53	6.50	1.77	1.54

Table No. 2

Base Module	UC	UL
K102	1.57	3.86
K202/203	1.77	4.78
K302/303	1.97	4.92
K402/403	2.17	6.18
K513/514	2.56	6.46
K613/614	2.76	7.05
K713/714	3.35	8.43
K813/814	3.94	10.35
K913/914	4.33	12.32
K1013/K1014	5.12	14.25

Table No. 3

Metric and Stainless Output available on request. Contact STOBER Drives for delivery.

	Standard Bore - Inches			Metric Bore - mm			Stainless Bore	
Base Module	U	UA	UB	U	UA	UB	Inches	mm
K102	1.000$_{G7}$	.250	1.11	25$_{H7}$	8$_{JS9}$	28.3	1.000	25
K202/203	1.1875$_{G7}$	.250	1.31	30$_{H7}$	8$_{JS9}$	33.3	1.1875, 1.125, 1.25	30
K302/303	1.375$_{G7}$	.312	1.52	35$_{H7}$	10$_{JS9}$	38.3	1.25, 1.375	35
K402/403	1.500$_{G7}$	.375	1.67	40$_{H7}$	12$_{JS9}$	43.3	1.500	40
K513/514	2.000$_{G7}$	.500	2.13	50$_{H7}$	14$_{JS9}$	53.8	2.000	40, 50
K613/614	2.000$_{G7}$	.500	2.23	50$_{H7}$	14$_{JS9}$	53.8	1.4375, 1.9375, 2.000	40, 50, 60
K713/714	2.375$_{G7}$	.625	2.66	60$_{H7}$	18$_{JS9}$	64.4	—	60
K813/814	2.750$_{G7}$	.625	3.03	70$_{H7}$	20$_{JS9}$	74.9	2.1875, 2.375, 2.6875, 2.750	60, 70
K913/914	3.250$_{G7}$	.750	3.59	90$_{H7}$	25$_{JS9}$	95.4	2.6875, 2.9375, 3.000, 3.4375	90
K1013/K1014	4.000$_{G7}$	1.000	4.31	100$_{H7}$	28$_{JS9}$	116	—	—

K

1. Removal Bolt – not supplied. See Page 235.
2. Mounting Bolt – must be smaller than removal bolt.

For approximate weight, add adapter weight from Table 4 and base module weight from Table 5.

Part No. Example

Tapped Holes Housing with TriAdapt® Motor Adapter

K303AG0650 MT20

See web site for drawings.

ServoFit® "K" Series–Helical/Bevel Tapped Hole – "G" Housing Hollow Output – Dimensional Data

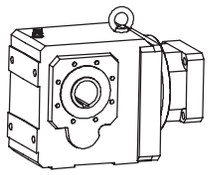

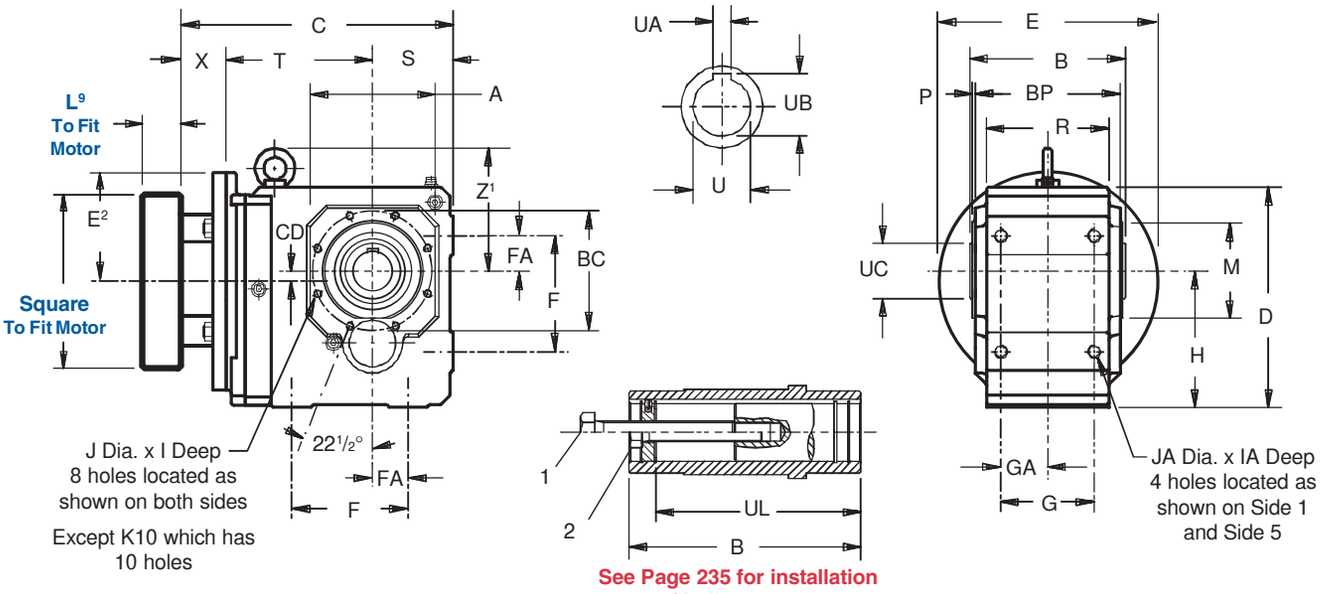

See Page 235 for installation of hollow ouput.

Drawing for Units
K513AG — K1014AG

Table No. 4

"K" Series – Tapped Hole Unit Dimensions (Inches) – "G" Housing Style

Base	MT10			MT20			MT30			MT40			MT50			Wt.
Module	CD	C	T	CD	C	T	CD	C	T	CD	C	T	CD	C	T	lbs.
K102	1.42	9.40	4.88	1.42	9.96	5.04	–	–	–	–	–	–	–	–	–	31
K202	1.81	9.76	5.63	1.81	10.32	5.79	1.81	10.79	5.87	–	–	–	–	–	–	40
K203	1.81	11.22	7.09	–	–	–	–	–	–	–	–	–	–	–	–	53
K302	2.07	10.94	6.42	2.07	11.49	6.57	2.07	11.96	6.65	–	–	–	–	–	–	67
K303	2.07	12.39	7.87	.63	13.19	8.27	–	–	–	–	–	–	–	–	–	73
K402	–	–	–	2.36	12.87	7.36	2.36	13.34	7.44	2.36	14.60	7.56	–	–	–	93
K403	2.36	13.77	8.66	.91	14.57	9.06	–	–	–	–	–	–	–	–	–	100
K513	–	–	–	.59	12.68	6.77	.59	13.15	6.85	.59	14.41	6.97	–	–	–	106
K514	–	–	–	.59	14.37	8.46	–	–	–	–	–	–	–	–	–	109
K613	–	–	–	.71	14.21	7.52	.71	14.68	7.60	.71	15.94	7.72	.71	11.48	8.27	170
K614	–	–	–	.71	15.90	9.21	–	–	–	–	–	–	–	–	–	177
K713	–	–	–	–	–	–	.79	15.98	8.70	.79	17.24	8.82	.79	12.54	9.33	221
K714	–	–	–	.79	17.24	10.35	.79	18.42	11.14	–	–	–	–	–	–	234
K813	–	–	–	–	–	–	.94	17.79	9.72	.94	19.01	9.80	.94	13.52	10.31	309
K814	–	–	–	–	–	–	.94	20.20	12.13	–	–	–	–	–	–	331
K913	–	–	–	–	–	–	–	–	–	.98	22.16	11.57	.98	15.30	12.09	508
K914	–	–	–	–	–	–	.98	23.35	13.90	.98	24.96	14.37	–	–	–	530
K1013	–	–	–	–	–	–	–	–	–	–	–	–	1.10	27.50	15.43	1,055
K1014	–	–	–	–	–	–	–	–	–	1.10	30.08	17.72	1.10	30.77	18.70	1,079

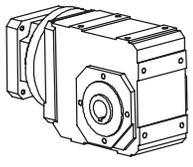

K1 Housing with tapped holes on Side 1, Side 2, and Side 5.

Table No. 5 "MT" Motor Plate Dimensions

Motor Adapter	Motor Shaft D6 Max. 1)		Motor Plate 2) Thickness		Inches			Wt.
			L9 Minimum					
	mm	ins.	mm	inches	E	E2	X	lbs.
MT10	19	.748	21	.83	5.51	2.75	1.57	5
MT20	24	.945	24	.95	6.30	3.15	1.97	8
MT30	38	1.260	25	.98	7.87	3.94	2.36	12
MT40	48	1.890	33	1.30	9.84	4.92	3.50	18
MT50	60	2.362	43	1.69	11.81	5.91	3.21	16

1) If an adapter bushing is required it will be supplied as a component of the motor mounting plate.
2) Motor plate maximum thickness (L9) will vary with motor shaft length but will not be less than shown.

K

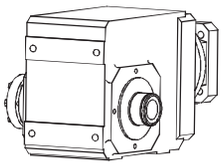

ServoFit® "K" Series–Helical/Bevel Tapped Hole – "G" Housing Single Bushing – Dimensional Data

STÖBER

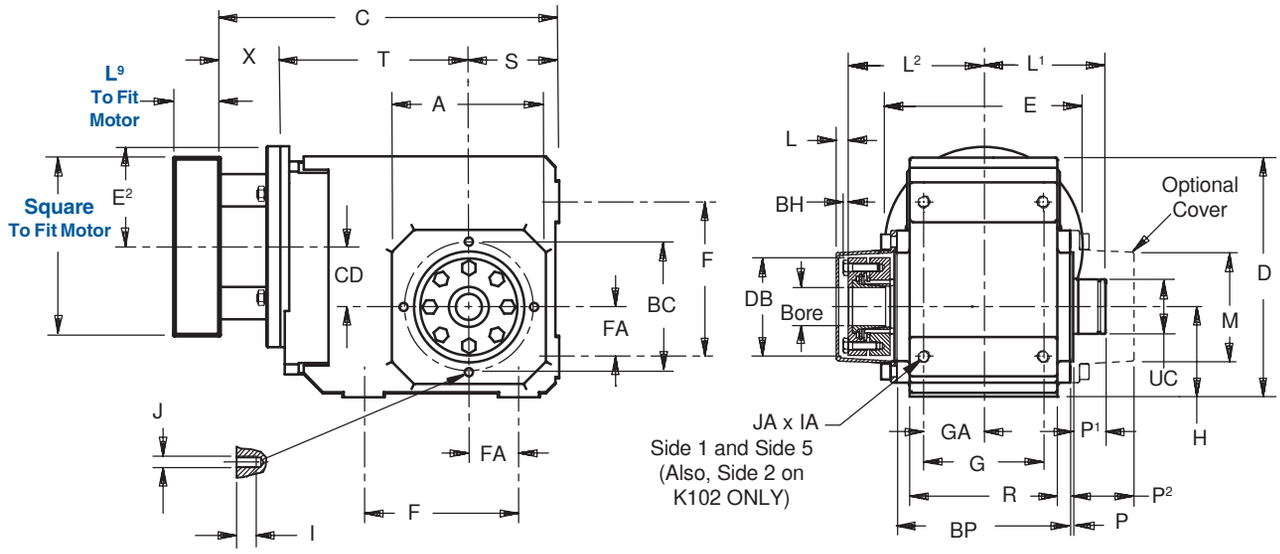

Drawing for Units
K102WG — K403WG

Important: A 1/32 x 45° chamfer minimum is recommended for the shaft end. The bushing will accept a shaft with a tolerance of +.000/-.005 inches.

Table No. 1 **"K" Series – Single Side Wobble Free – Unit Dimensions (Inches)**

Base Module	Max. Bore	A	D	F	G	H	I	J	L	L_1	L_2	M	P	P_1	P_2	R	S	Z_1	BC	BH
K102	1.000	4.13	6.30	3.54	2.76	2.36	.51	4-M8	.24	3.15	3.66	3.07	.12	.95	1.62	3.54	2.36	–	3.54	.16
K202/203	1.1875	4.57	7.48	4.53	3.54	2.56	.51	4-M8	.39	3.78	4.27	3.46	.12	1.02	1.54	4.53	2.56	–	3.94	.16
K302/303	1.500	5.20	8.39	5.12	4.13	2.95	.51	4-M8	.43	4.02	4.54	3.78	.12	1.02	1.55	5.12	2.95	–	4.53	.16
K402/403	1.500	5.98	9.45	6.10	4.72	3.54	.63	4-M10	.47	4.69	5.32	4.33	.14	1.14	1.83	5.83	3.54	–	5.12	.20
K513/514	2.000	5.71	10.24	5.51	4.92	6.30	.63	8-M10	.43	4.96	5.61	4.54	.14	1.18	1.87	6.30	3.94	5.98	5.12	.20
K613/614	2.1875	7.09	12.20	6.30	5.12	7.48	.63	8-M10	.51	5.12	6.10	5.00	.14	1.38	2.11	6.61	4.72	5.98	6.50	.24
K713/714	2.375	7.68	13.46	7.09	5.71	8.35	.75	8-M12	—	6.20	7.29	—	.14	1.61	2.70	7.48	4.92	7.52	7.28	.24
K813/814	2.750	8.90	16.14	9.45	7.28	10.43	.75	8-M12	—	7.58	8.70	—	.16	2.03	2.99	9.25	5.71	8.11	8.46	.31

Table No. 2

Base Module	BP	DB	FA	GA	IA	JA	UC
K102	4.17	2.76	1.18	1.38	.51	M8	1.54
K202/203	5.28	3.07	1.38	1.77	.63	M10	1.73
K302/303	5.75	3.31	1.57	2.07	.63	M10	1.93
K402/403	6.81	3.82	1.97	2.36	.75	M12	2.13
K513/514	7.28	4.13	1.57	2.46	1.02	M16	2.56
K613/614	7.87	4.65	1.97	2.56	1.02	M16	2.91
K713/714	8.90	5.43	2.17	2.85	1.22	M20	3.35
K813/814	11.10	6.22	2.95	3.64	1.50	M24	3.94

Table No. 3 **"MT" Motor Plate Dimensions**

Motor Adapter	Motor Shaft D^6 Max. [1]		Motor Plate [2] Thickness		Inches			Wt. lbs.
			L^9 Minimum					
	mm	ins.	mm	inches	E	E^2	X	
MT10	19	.748	21	.83	5.51	2.75	1.57	5
MT20	24	.945	24	.95	6.30	3.15	1.97	8
MT30	38	1.260	25	.98	7.87	3.94	2.36	12
MT40	48	1.890	33	1.30	9.84	4.92	3.50	18
MT50	60	2.362	43	1.69	11.81	5.91	3.21	16

[1] If an adapter bushing is required it will be supplied as a component of the motor mounting plate.
[2] Motor plate maximum thickness (L^9) will vary with motor shaft length but will not be less than shown.

Table No. 4
"WF" Single Side Bushing – Metric

Unit	Stock Bores Sizes — mm		
	25	30	35
K1	**WF1-25**	–	–
K2	–	**WF2-30**	–
K3	–	**WF3-30**	**WF3-35**

Table No. 5 **"WF" Single Side Bushing – Inches**

Unit	Stock Bores Sizes					
	1	1 3/16	1 1/4	1 3/8	1 7/16	1 1/2
K1	**WF1-100**	–	–	–	–	–
K2	**WF2-100**	**WF2-103**	–	–	–	–
K3	**WF3-100**	**WF3-103**	**WF3-104**	**WF3-106**	**WF3-107**	**WF3-108**
K4	**WF4-100**	**WF4-103**	**WF4-104**	**WF4-106**	**WF4-107**	**WF4-108**

K

ServoFit® "K" Series–Helical/Bevel Tapped Hole – "G" Housing Single Bushing – Dimensional Data

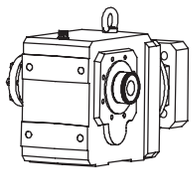

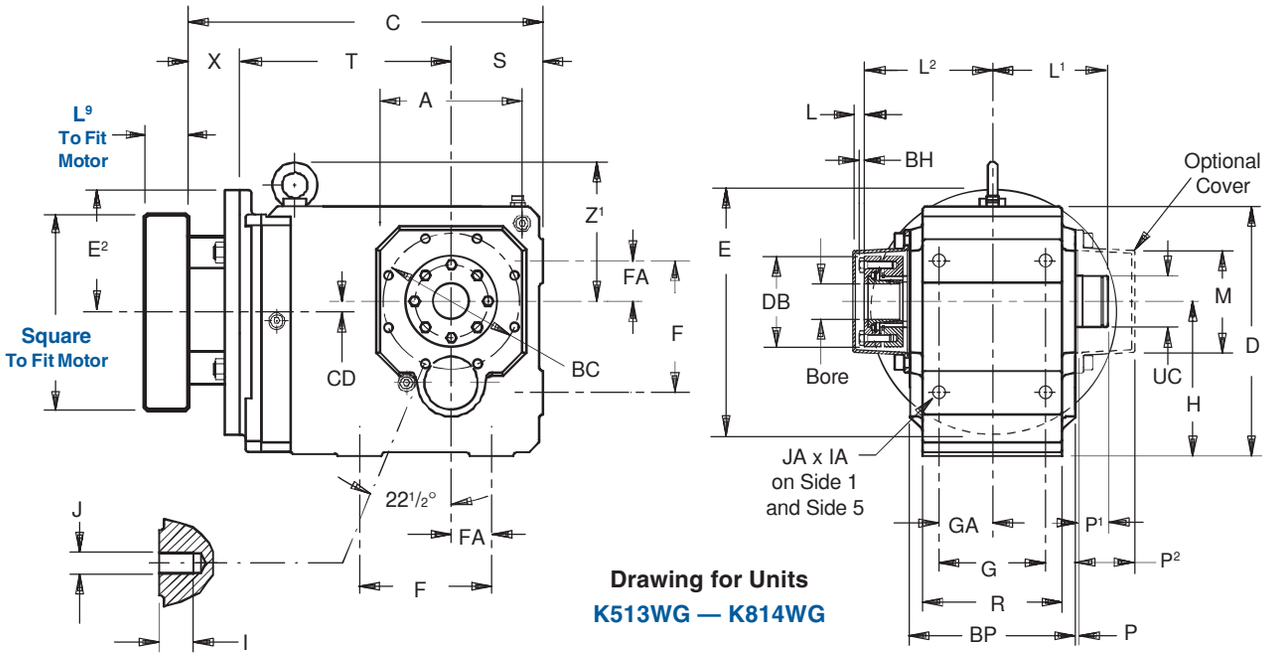

Drawing for Units
K513WG — K814WG

Table No. 6 "K" Series – Single Side Bushing – Unit Dimensions (Inches) – "G" Housing Style

Base	MT10			MT20			MT30			MT40			MT50			Wt.
Module	CD	C	T	CD	C	T	CD	C	T	CD	C	T	CD	C	T	lbs.
K102	1.42	9.40	4.88	1.42	9.96	5.04	–	–	–	–	–	–	–	–	–	31
K202	1.81	9.76	5.63	1.81	10.32	5.79	1.81	10.79	5.87	–	–	–	–	–	–	40
K203	1.81	11.22	7.09	–	–	–	–	–	–	–	–	–	–	–	–	53
K302	2.07	10.94	6.42	2.07	11.49	6.57	2.07	11.96	6.65	–	–	–	–	–	–	67
K303	2.07	12.39	7.87	.63	13.19	8.27	–	–	–	–	–	–	–	–	–	73
K402	–	–	–	2.36	12.87	7.36	2.36	13.34	7.44	2.36	14.60	7.56	–	–	–	93
K403	2.36	13.77	8.66	.91	14.57	9.06	–	–	–	–	–	–	–	–	–	100
K513	–	–	–	.59	12.68	6.77	.59	13.15	6.85	.59	14.41	6.97	–	–	–	106
K514	–	–	–	.59	14.37	8.46	–	–	–	–	–	–	–	–	–	109
K613	–	–	–	.71	14.21	7.52	.71	14.68	7.60	.71	15.94	7.72	.71	11.48	8.27	170
K614	–	–	–	.71	15.90	9.21	–	–	–	–	–	–	–	–	–	177
K713	–	–	–	–	–	–	.79	15.98	8.70	.79	17.24	8.82	.79	12.54	9.33	221
K714	–	–	–	.79	17.24	10.35	.79	18.42	11.14	–	–	–	–	–	–	234
K813	–	–	–	–	–	–	.94	17.79	9.72	.94	19.01	9.80	.94	13.52	10.31	309
K814	–	–	–	–	–	–	.94	20.20	12.13	–	–	–	–	–	–	331

Part No. Example

Unit with TriAdapt® Motor Adapter
1 3/8" Bore Single Bushing
K402WG0560 MT20
WF4–106

SPECIFY BUSHING SIDE WHEN ORDERING

Table No. 7 "WF" Single Side Bushings – Inches

	Stock Bores Sizes — Inches											
Unit	1 7/16	1 1/2	1 5/8	1 11/16	1 3/4	1 7/8	1 15/16	2	2 3/16	2 3/8	2 7/16	2 3/4
K5	WF5-107	WF5-108	WF5-110	WF5-111	WF5-112	WF5-114	WF5-115	WF5-200	–	–	–	–
K6	WF6-107	WF6-108	WF6-110	WF6-111	WF6-112	–	WF6-115	WF6-200	WF6-203	–	–	–
K7	–	–	–	–	–	–	WF7-115	WF7-200	WF7-203	WF7-206	–	–
K8	–	–	–	–	–	–	–	–	WF8-203	WF8-206	WB7-207	WF8-212

NOTES: A complete bushing kit includes the locking ring assembly, tapered cone, support ring, and all hardware to mount the kit into the reducer. The WF1-100 bushing does not have a tapered cone.
The optional cover caps can be ordered separately.

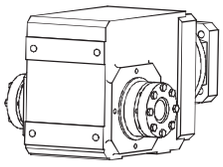

ServoFit® "K" Series–Helical/Bevel Tapped Hole – "G" Housing Double Bushing – Dimensional Data

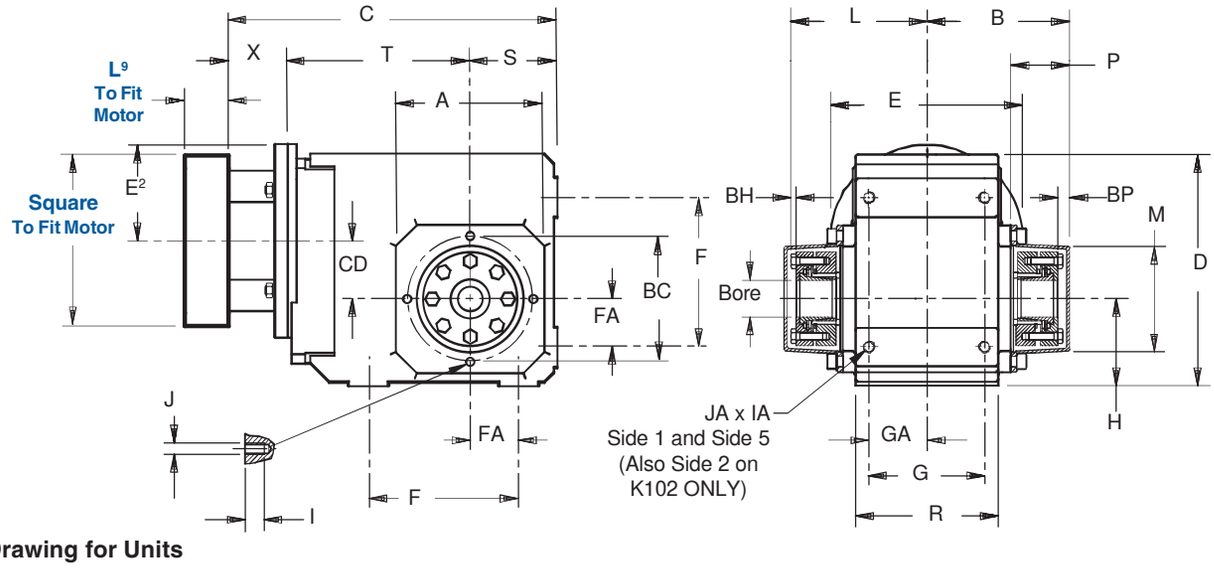

Drawing for Units
K102WG — K403WG

Important: A 1/32 x 45° chamfer minimum is recommended for the shaft end. The bushing will accept a shaft with a tolerance of +.000/-.005 inches.

Table No. 1 **"K" Series – Double Side Bushing – Unit Dimensions (Inches)**

Base Module	A	B	D	F	G	H	I	J	L	M	P	R	S	Z[1]	BC	BP	BH	FA	GA	IA	JA
K102	4.13	3.90	6.30	3.54	2.76	2.36	.51	4-M8	3.82	3.07	1.97	3.54	2.36	–	3.54	.24	.16	1.18	1.38	.51	M8
K202/203	4.57	4.68	7.48	4.53	3.54	2.56	.51	4-M8	4.45	3.46	2.05	4.53	2.56	–	3.94	.39	.16	1.38	1.77	.63	M10
K302/303	5.20	4.98	8.39	5.12	4.13	2.95	.51	4-M8	4.70	3.78	2.09	5.12	2.95	–	4.53	.43	.16	1.57	2.07	.63	M10
K402/403	5.98	5.80	9.45	6.10	4.72	3.54	.63	4-M10	5.53	4.33	2.40	5.83	3.54	–	5.12	.47	.20	1.97	2.36	.75	M12
K513/514	5.71	6.05	10.24	5.51	4.92	6.30	.63	8-M10	5.81	4.54	2.40	6.30	3.94	5.98	5.12	.43	.20	1.57	2.46	1.02	M16
K613/614	7.09	6.61	12.20	6.30	5.12	7.48	.63	8-M10	6.34	5.00	2.68	6.61	4.72	6.77	6.50	.51	.24	1.97	2.56	1.02	M16
K713/714	7.68	7.68	13.46	7.09	5.71	8.35	.75	8-M12	7.53	5.75	2.91	7.48	4.92	7.52	7.28	.39	.24	2.17	2.85	1.22	M20
K813/814	8.90	9.34	16.14	9.45	7.28	10.43	.75	8-M12	9.01	6.95	3.43	9.25	5.71	8.11	8.46	.64	.31	2.95	3.64	1.50	M24

Table No. 2 **"MT" Motor Plate Dimensions**

Motor Adapter	Motor Shaft D[6] Max. [1]		Motor Plate [2] Thickness L[9] Minimum		Inches			Wt. lbs.
	mm	ins.	mm	inches	E	E[2]	X	
MT10	19	.748	21	.83	5.51	2.75	1.57	5
MT20	24	.945	24	.95	6.30	3.15	1.97	8
MT30	38	1.260	25	.98	7.87	3.94	2.36	12
MT40	48	1.890	33	1.30	9.84	4.92	3.50	18
MT50	60	2.362	43	1.69	11.81	5.91	3.21	16

[1] If an adapter bushing is required it will be supplied as a component of the motor mounting plate.
[2] Motor plate maximum thickness (L[9]) will vary with motor shaft length but will not be less than shown.

Table No. 3
"WFB" – Double Side Bushings – Metric

Unit	Stock Bores Sizes — mm			
	25	30	35	40
K1	WFB1-25	–	–	–
K2	–	WFB2-30	–	–
K3	–	WFB3-30	WFB3-35	–
K4	–	–	–	WFB4-40
K5	–	–	–	WFB5-40
K6	–	–	–	WFB6-40

Table No. 4 **"WFB" Double Side Bushings – Inches**

Unit	Stock Bores Sizes					
	1	1 3/16	1 1/4	1 3/8	1 7/16	1 1/2
K1	WFB1-100	–	–	–	–	–
K2	WFB2-100	WFB2-103	–	–	–	–
K3	WFB3-100	WFB3-103	WFB3-104	WFB3-106	WFB3-107	WFB3-108
K4	WFB4-100	WFB4-103	WFB4-104	WFB4-106	WFB4-107	WFB4-108

K

ServoFit® "K" Series–Helical/Bevel Tapped Hole – "G" Housing Double Bushing – Dimensional Data

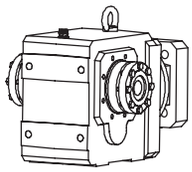

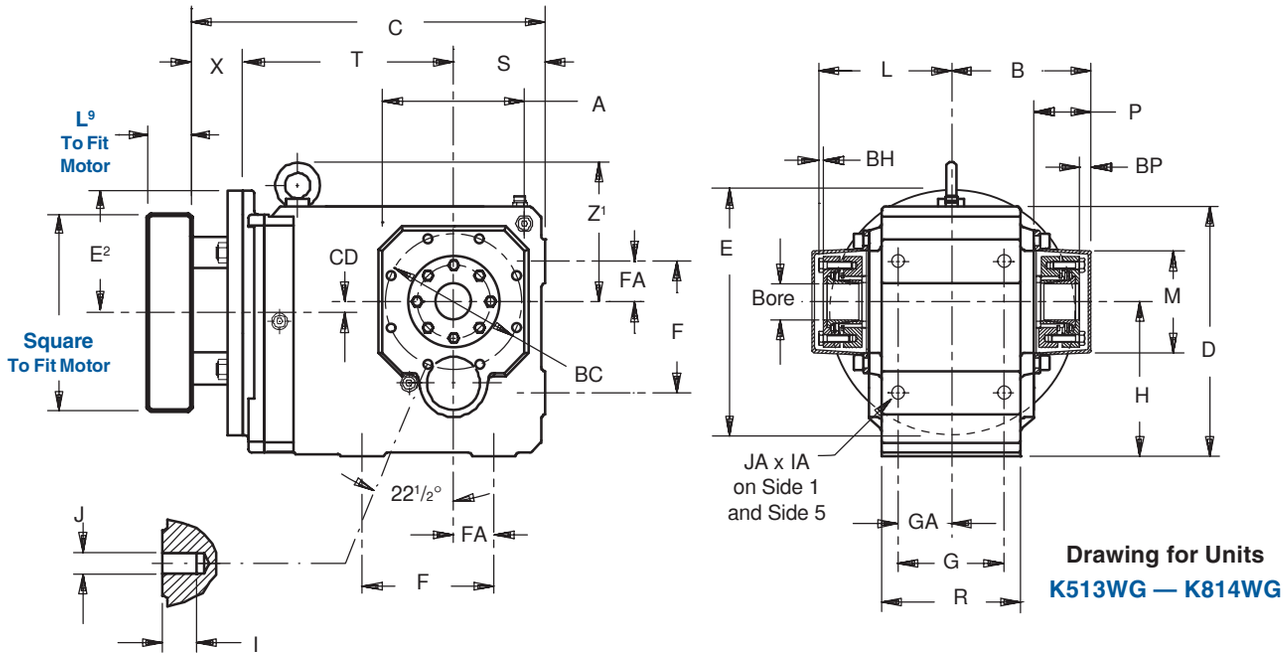

Drawing for Units
K513WG — K814WG

Table No. 5 "K" Series – Double Side Bushing – Unit Dimensions (Inches) – "G" Housing Style

Base	MT10			MT20			MT30			MT40			MT50			Wt.
Module	CD	C	T	CD	C	T	CD	C	T	CD	C	T	CD	C	T	lbs.
K102	1.42	9.40	4.88	1.42	9.96	5.04	–	–	–	–	–	–	–	–	–	31
K202	1.81	9.76	5.63	1.81	10.32	5.79	1.81	10.79	5.87	–	–	–	–	–	–	40
K203	1.81	11.22	7.09	–	–	–	–	–	–	–	–	–	–	–	–	53
K302	2.07	10.94	6.42	2.07	11.49	6.57	2.07	11.96	6.65	–	–	–	–	–	–	67
K303	2.07	12.39	7.87	.63	13.19	8.27	–	–	–	–	–	–	–	–	–	73
K402	–	–	–	2.36	12.87	7.36	2.36	13.34	7.44	2.36	14.60	7.56	–	–	–	93
K403	2.36	13.77	8.66	.91	14.57	9.06	–	–	–	–	–	–	–	–	–	100
K513	–	–	–	.59	12.68	6.77	.59	13.15	6.85	.59	14.41	6.97	–	–	–	106
K514	–	–	–	.59	14.37	8.46	–	–	–	–	–	–	–	–	–	109
K613	–	–	–	.71	14.21	7.52	.71	14.68	7.60	.71	15.94	7.72	.71	11.48	8.27	170
K614	–	–	–	.71	15.90	9.21	–	–	–	–	–	–	–	–	–	177
K713	–	–	–	–	–	–	.79	15.98	8.70	.79	17.24	8.82	.79	12.54	9.33	221
K714	–	–	–	.79	17.24	10.35	.79	18.42	11.14	–	–	–	–	–	–	234
K813	–	–	–	–	–	–	.94	17.79	9.72	.94	19.01	9.80	.94	13.52	10.31	309
K814	–	–	–	–	–	–	.94	20.20	12.13	–	–	–	–	–	–	331

Part No. Example

Unit with TriAdapt® Motor Adapter
1 3/8" Bore Double Bushing
K402WG0560 MT20
WFB4–106

Table No. 6 "WFB" Double Side Bushings – Inches

	Stock Bores Sizes — Inches											
Unit	1 7/16	1 1/2	1 5/8	1 11/16	1 3/4	1 7/8	1 15/16	2	2 3/16	2 3/8	2 7/16	2 3/4
K5	WFB5-107	WFB5-108	WFB5-110	WFB5-111	WFB5-112	WFB5-114	WFB5-115	WFB5-200	–	–	–	–
K6	WFB6-107	WFB6-108	WFB6-110	WFB6-111	WFB6-112	–	WFB6-115	WFB6-200	WFB6-203	–	–	–
K7	–	–	–	–	–	–	WFB7-115	WFB7-200	WFB7-203	WFB7-206	–	–
K8	–	–	–	–	–	–	–	–	WFB8-203	WFB8-206	WFB7-207	WFB8-212

NOTES: A complete bushing kit includes the locking ring assembly, tapered cone, support ring, and all hardware to mount the kit into the reducer. The WFB1-100 bushing does not have a tapered cone.

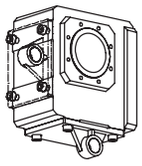

ServoFit® "K" Series–Helical/Bevel Torque Arm Bracket Dimensional Data

(Torque arm supplied by others.)

Drawing for Units
K102AGD — K403AGD

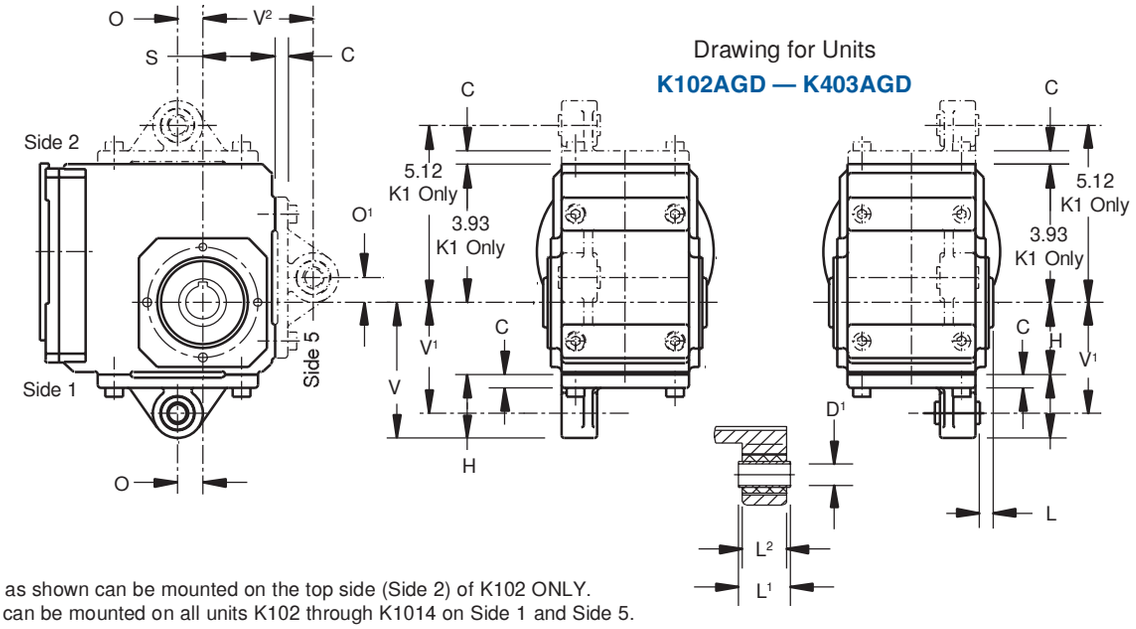

The bracket as shown can be mounted on the top side (Side 2) of K102 ONLY.
All brackets can be mounted on all units K102 through K1014 on Side 1 and Side 5.

Table No. 1 **"K" Series — Torque Arm Bracket Dimensions (Inches)**

Base Module	C	C¹	D¹ H9		H	L	L¹	L²	O	O¹	S	V	V¹	V²
K102	.39	2.03	.47	+0.017/-0.000	2.36	.51	1.10	.94	.59	.59	2.36	4.39	3.54	3.54
K202/K203	.47	2.26	.63	+0.017/-0.000	2.56	.53	1.50	1.26	.89	.89	2.56	4.82	3.93	3.93
K302/K303	.47	2.66	.63	+0.017/-0.000	2.95	.47	1.50	1.26	.98	.98	2.95	5.61	4.72	4.72
K402/K403	.55	3.46	.79	+0.020/-0.000	3.54	.67	1.81	1.57	1.08	1.08	3.54	7.00	5.91	5.91
K513/K514	.59	4.68	.79	+0.020/-0.000	6.30	.67	1.81	1.57	1.18	1.18	3.93	10.98	9.84	7.48
K613/K614	.59	3.50	.79	+0.020/-0.000	7.48	.81	1.81	1.57	1.18	1.18	4.72	10.98	9.84	7.09
K713/K714	.67	4.80	.79	+0.020/-0.000	8.35	.91	2.76	2.52	1.38	1.38	4.92	13.15	11.81	8.39
K813/K814	.67	4.77	.94	+0.020/-0.000	10.43	1.02	4.53	4.02	1.77	1.77	5.71	15.20	13.78	9.06
K913/K914	.79	6.80	.94	+0.020/-0.000	12.40	1.02	4.53	4.02	1.77	1.77	7.09	19.20	17.72	12.40
K1013/1014	1.65	9.25	1.57	+0.024/-0.000	14.76	.24	4.88	4.65	2.36	2.17	8.86	24.01	21.65	15.75

Drawing for Units
K513AGD — K1014AGD

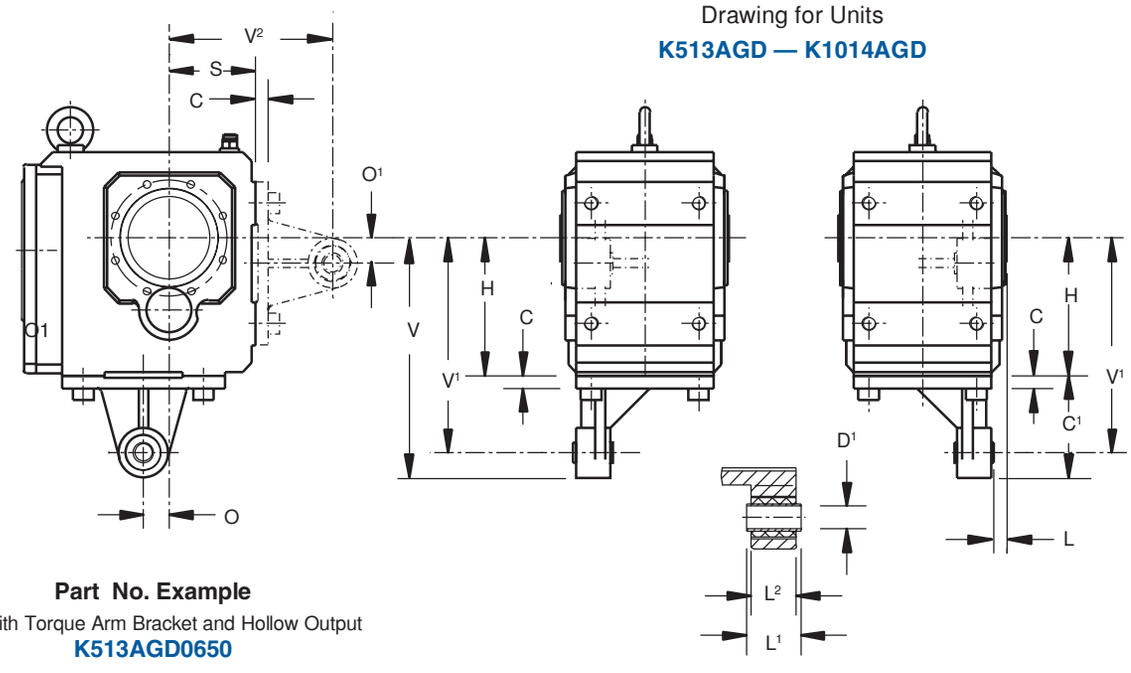

Part No. Example

Unit with Torque Arm Bracket and Hollow Output
K513AGD0650

K

ServoFit® "K" Series–Helical/Bevel Optional Round Flange Sizes Dimensional Data

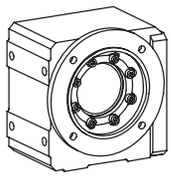

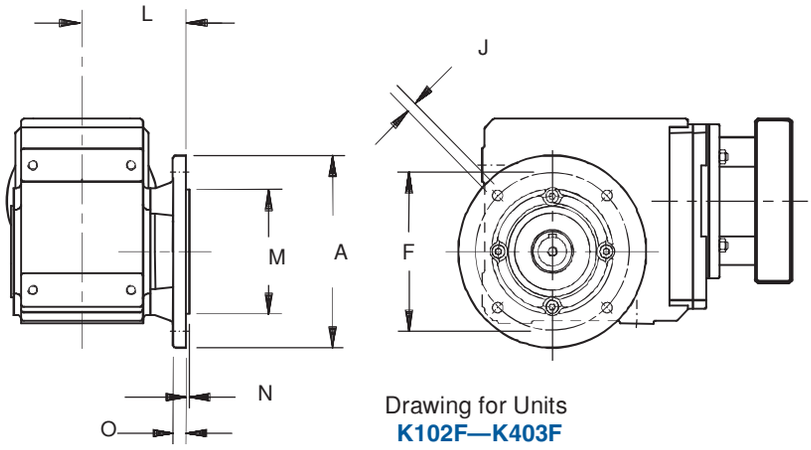

Drawing for Units
K102F—K403F

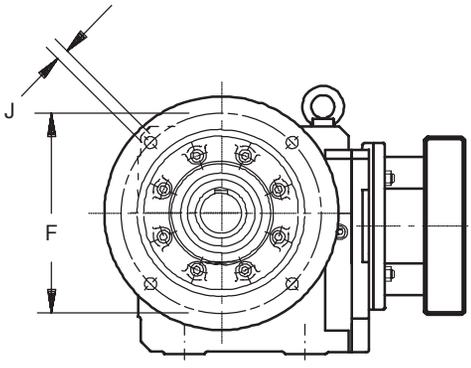

Drawing for Units
K513F—K814F

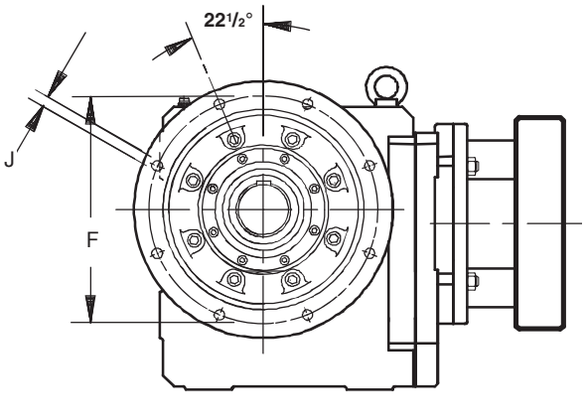

Drawing for Units
K913-K1014F

Table No. 1 "K" Series —Optional Flange Dimensions (Inches)

Base Module	Flange Designation	A	F	J	L	M	N	O
K102	140	5.51	4.53	.35	3.35	3.740 +0.001/-0.0004	.12	.39
	160 *	6.30	5.12	.35	3.35	4.331 +0.001/-0.0004	.14	.39
K202/K203	160	6.30	5.12	.35	3.90	4.331 +0.001/-0.0004	.14	.47
	200 *	7.87	6.50	.43	3.90	5.118 +0.001/-0.0004	.14	.47
K302/K303	160	6.30	5.12	.35	4.37	4.331 +0.001/-0.0004	.14	.55
	200 *	7.87	6.50	.43	4.37	5.118 +0.001/-0.0004	.14	.55
	250	9.84	8.46	.55	4.37	7.087 +0.001/-0.0004	.14	.55
K402/K403	**250** *	9.84	8.46	.55	4.98	7.087 +0.001/-0.0004	.16	.59
K513/K514	**250** *	9.84	8.46	.55	5.20	7.087 +0.001/-0.0004	.16	.59
K613/K614	**300** *	11.81	10.43	.55	5.35	9.055 +0.001/-0.0005	.16	.67
K713/K714	**350** *	13.78	11.81	.71	6.18	9.843 +0.000/-0.001	.20	.71
K813/K814	350	13.78	11.81	.71	7.32	9.843 +0.000/-0.001	.20	.79
	400 *	15.75	13.78	.71	7.32	11.811 +0.000/-0.001	.20	.79
	450	17.72	15.75	.71	7.32	13.781 +0.000/-0.002	.20	.79
K913/K914	**450** *	17.72	15.75	.71	8.46	13.780 +0.000/-0.002	.20	.91
	550	21.65	19.69	.71	8.46	17.717 +0.000/-0.002	.20	.91
K1013/K1014	**550**	21.65	19.69	.71	10.08	17.717 +0.000/-0.002	.20	.98

* This is the standard flange diameter. For other diameters, specify at the time of ordering.

K

Safety Instructions

In order to obtain long life and trouble-free operation from your STOBER gearhead, it is essential that the proper installation and operating procedures be followed. Failure to follow these instructions will void the drive's warranty.

WARNING: Safety is the most important consideration when operating any type of drive. Through proper application, safe handling methods, and wearing appropriate clothing, you can prevent accidents and injury to yourself and fellow workers.

The torque required by the application must not exceed the rated torque capacity of the drive. For safety purposes, a safety coupling should be installed between the driver and the driven load. Otherwise, overload may cause damage to the interior parts of the drive which may result in breaking the housing. As a result, persons could be injured by flying parts or splashing hot gear oil.

The shafts of STOBER drives rotate at very high speeds and can cut off or severely injure hands, fingers, and arms.

Follow all directions in the service instruction manual. Obey all federal, state and local safety regulations when operating the drive.

- Always be sure electrical power is off while making electrical connections and during installation and maintenance of the unit.
- Keep clothing, hands, and tools away from ventilation openings on motors and from all rotating parts during operation.
- Lift the drive with a double rope sling or other proper lifting equipment of adequate strength. Make sure load is secured and balanced to prevent shifting when unit is being moved. Lifting drives by hand may be dangerous and should be avoided.
- The intended use of lifting lugs is to handle the weight of the unit only. Never use a lifting lug to lift attached assemblies.
- Never operate drive at speeds higher than those shown on the nameplate, or personal injury may result. Contact STOBER Drives Inc., if there is any change of operating conditions from those for which the unit was originally sold (as stamped on the nameplate). Failure to comply could result in personal injury and or machinery damage.
- Always follow good safety practices at all times.

Each drive is tested before delivery. Before installation, however, it is advisable to examine the unit for possible damage which might have occurred during transit. If damage is discovered, it should be immediately reported to the transport agent.

If installation is delayed after receipt of the unit, the drive should be stored in a clean, dry place until put into service. Long term storage requires special procedures. If not kept in a heated, dry area, consult STOBER Drives, Inc. for storage instructions.

NOTE: If it is necessary to clean drive shafts, take care to protect the oil seals.

IMPORTANT: Do not use any device to hammer the unit onto the output shaft during installation since the bearing races could be damaged.

If you have questions about the installation, operation, maintenance or lubrication of the unit, information can be found in this catalog, on our website, or by calling STOBER Technical Support.